# Gasoline Spin-On - 3120R-RAC Series

FUEL

## Specifications:

| | |
|---|---|
| *Height:* | *With Bracket: 10.18" (25.85 cm)*<br>*Assembly Only: 9.68" (24.58 cm)* |
| *Width:* | *With Bracket: 4.0" (10.16 cm)*<br>*Assembly Only: 3.75" (9.52 cm)* |
| *Depth:* | *With Bracket: 5.0" (12.7 cm)*<br>*Assembly Only: 3.57" (9.06 cm)* |
| *Weight (Dry):* | *With Bracket: 4.98 lb (2.25 kg)*<br>*Assembly Only: 3.1 lb (1.4 kg)* |
| *Ports:* | *1/2-14 NPTF* |
| *Service Clearance: 2.0" (5.1 cm)* | |

Create a Part Number

| Mounting Head | Bowl Material |
|---|---|
| 2 Fuel Ports 120 gph (454 lph) | Metal Bowl - Inboard/Outboard |
| 3120R-RAC | -32 |

| ASSEMBLIES | DESCRIPTION |
|---|---|
| 3120R-RAC-32 | Inboard/Outboard - Marine Gasoline, FF/WS, Metal Bowl, 120 gph Flow Rate, 10 Micron Filtration |

## Dimensions:

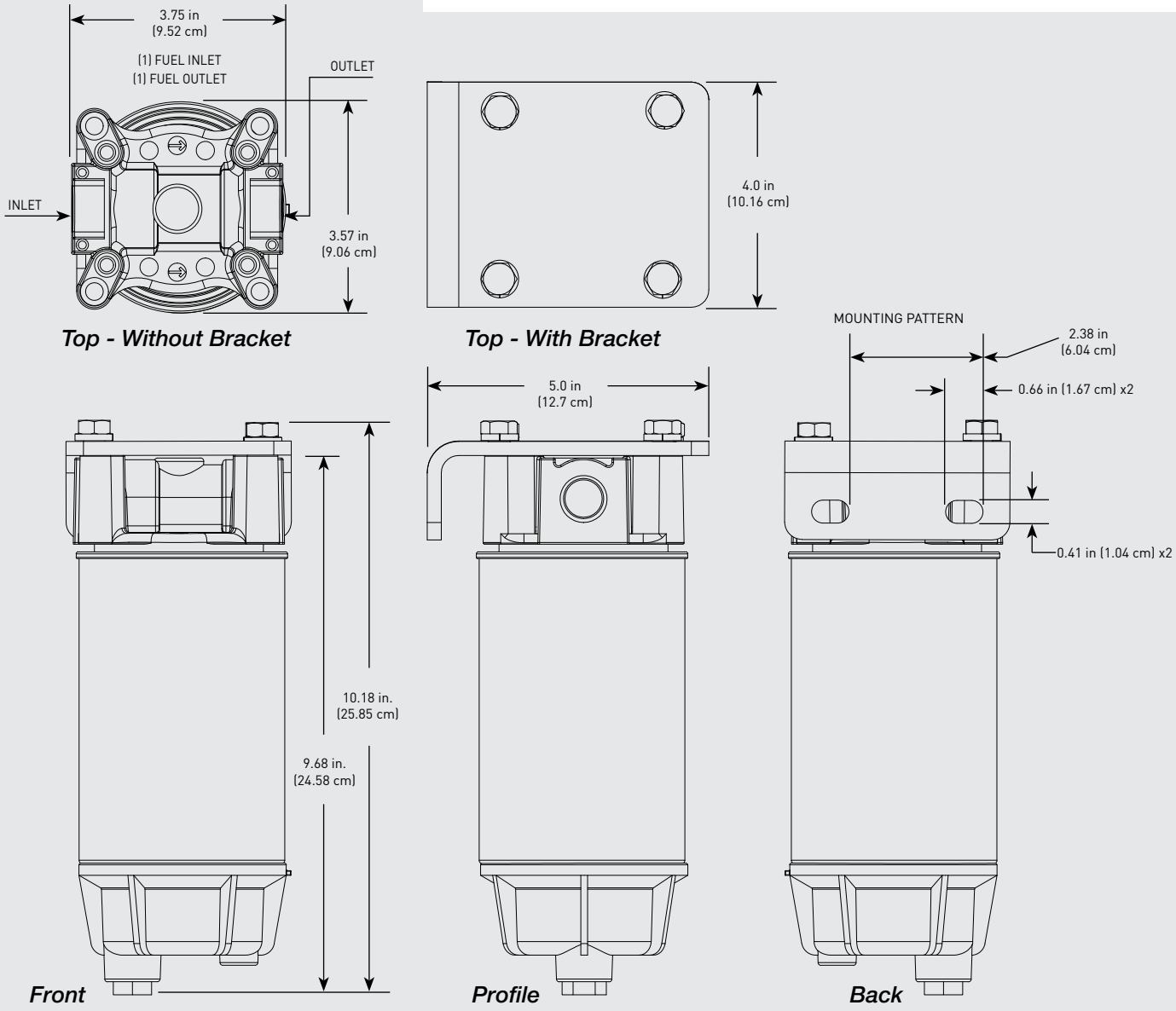

# PARTS

## Gasoline Spin-On - 3120R-RAC Series

1

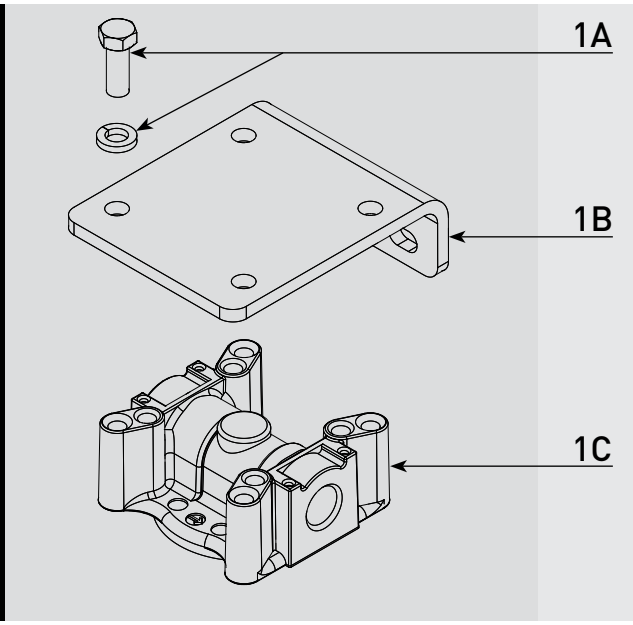


| | Part # | Description |
|---|---|---|
| 1A | | Mounting Hardware (X4) - 3/8”-16 x1” Capscrew; 3/8” Lock Washer |
| 1B | | 3120 Series Mounting Bracket |
| 1C | | 3120 Series Head Assembly |
| 2A | | Square Cut Gasket - *Included in 2B* |
| 2B | S3232TUL<br>S3232 | 3120R-RAC-32 Replacement Filter - 10 micron - *Includes 2A, 2C*<br>Replacement Filter - 10 micron - *Includes 2A, 2C* |
| 2C | | Bowl O-ring - *Included in 2B & 3A* |
| 3A | RK 30473-02 | Replacement Metal Bowl Kit - *Includes 2C and 3B* |
| 3B | | Bowl Drain Port Plug Kit - 3/8”-18 NPTF Steel Hex Plug |

2

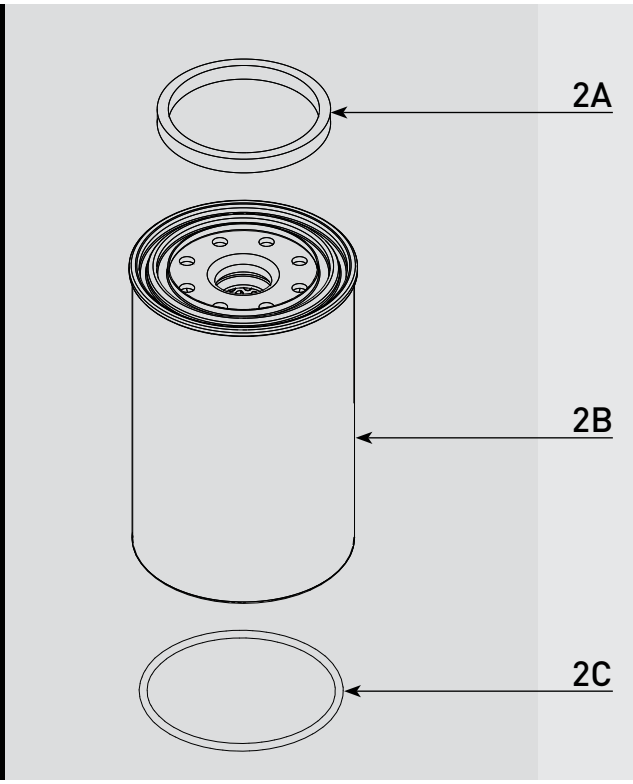


3

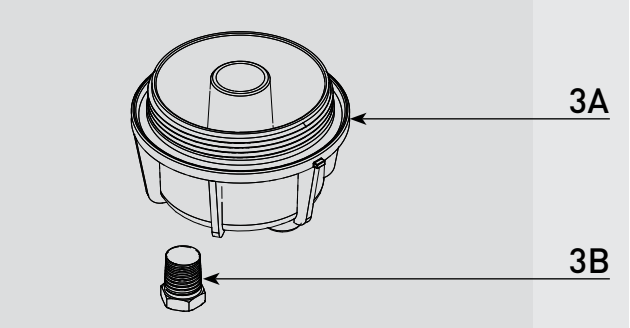


Online Link
Marine Fuel Spin-On Product Selector



Questions? Email: **racortech@parker.com** Phone: **800-344-3286** News: www.**racornews**.com