HY13-1526-002-M1/US

Torqmotor™ Service Procedure

Effective: January 2023

TC, TS, TB, TE and TJ Series

Low Speed, High Torque Hydraulic Torqmotors™

WARNING

FAILURE OR IMPROPER SELECTION OR IMPROPER USE OF THE PRODUCTS AND/OR SYSTEMS DESCRIBED HEREIN OR RELATED ITEMS CAN CAUSE DEATH, PERSONAL INJURY AND PROPERTY DAMAGE.

This document and other information from Parker Hannifin Corporation, its subsidiaries and authorized distributors provide product and/or system options for further investigation by users having technical expertise. It is important that you analyze all aspects of your application and review the information concerning the product or system in the current product catalog. Due to the variety of operating conditions and applications for these products or systems, the user, through its own analysis and testing, is solely responsible for making the final selection of the products and systems and assuring that all performance, safety and warning requirements of the application are met.

The products described herein, including without limitation, product features, specifications, designs, availability and pricing, are subject to change by Parker Hannifin Corporation and its subsidiaries at any time without notice.

Offer of Sale

The items described in this document are hereby offered for sale by Parker Hannifin Corporation, its subsidiaries or its authorized distributors. This offer and its acceptance are governed by the provisions stated in the “Offer of Sale”.

© Copyright 2017, 2015, 2007 - 2005, 2000, 1999, Parker Hannifin Corporation, All Rights Reserved

Parker Hannifin Corporation
Hydraulic Pump/Motor Division
Greeneville, TN 37745 US

Table of Contents

Definitions 3
Design Features ..... 4 - 5
Introduction 6
Troubleshooting Guide 7
Troubleshooting Checklist 8
Tools and Material Required for Servicing 9
Bolt Torque 10
Exploded Assembly View 11-17
TC Service Parts List Chart 18-19
TS Service Parts List Chart 20
TB Service Parts List Chart 21-22
TE Service Parts List Chart 23-24
TJ Service Parts List Chart 25-26
Disassembly & Inspection 27-34
Torqmotor™ Assembly 35-44
Rotor Set Component Assembly Procedure (One Piece Stator) 45
Rotor Set Component Assembly Procedure (Two Piece Stator) 46-47
Final Checks 48
Hydraulic Fluids, Filtration, Oil Temperature 48
Tips for Maintaining the System 49
Offer of Sale ..... Inside Back Cover

Definitions

NOTE: A NOTE provides key information to make a procedure easier or quicker to complete.

CAUTION: A CAUTION refers to procedure that must be followed to avoid damaging the Torqmotor™ or other system components.

WARNING: A WARNING REFERS TO PROCEDURE THAT MUST BE FOLLOWED FOR THE SAFETY OF THE EQUIPMENT OPERATOR AND THE PERSON INSPECTING OR REPAIRING THE TORQMOTOR™.

Disclaimer

This Service Manual has been prepared by Parker Hannifin for reference and use by mechanics who have been trained to repair and service hydraulic motors and systems on commercial and non-commercial equipment applications. Parker Hannifin has exercised reasonable care and diligence to present accurate, clear and complete information and instructions regarding the techniques and tools required for maintaining, repairing and servicing the complete line of Parker TC, TS, TB, TE and TJ Torqmotor™ Units. However, despite the care and effort taken in preparing this general Service Manual, Parker **makes no warranties** that (a) the Service Manual or any explanations, illustrations, information, techniques or tools described herein are either accurate, complete or correct as applied to a specific Torqmotor™ unit, or (b) any repairs or service of a particular Torqmotor™ unit will result in a properly functioning Torqmotor™ unit.

If inspection or testing reveals evidence of abnormal wear or damage to the Torqmotor™ unit or if you encounter circumstances not covered in the Manual, STOP – CONSULT THE EQUIPMENT MANUFACTURER'S SERVICE MANUAL AND WARRANTY. DO NOT TRY TO REPAIR OR SERVICE A TORQMOTOR™ UNIT WHICH HAS BEEN DAMAGED OR INCLUDES ANY PART THAT SHOWS EXCESSIVE WEAR UNLESS THE DAMAGED AND WORN PARTS ARE REPLACED WITH ORIGINAL PARKER REPLACEMENT AND SERVICE PARTS AND THE UNIT IS RESTORED TO PARKER SPECIFICATIONS FOR THE TORQMOTOR™ UNIT.

It is the responsibility of the mechanic performing the maintenance, repairs or service on a particular Torqmotor™ unit to (a) inspect the unit for abnormal wear and damage, (b) choose a repair procedure which will not endanger his/her safety, the safety of others, the equipment, or the safe operation of the Torqmotor™, and (c) fully inspect and test the Torqmotor™ unit and the hydraulic system to insure that the repair or service of the Torqmotor™ unit has been properly performed and that the Torqmotor™ and hydraulic system will function properly.

Parker Hannifin Corporation
Hydraulic Pump/Motor Division
Greeneville, TN 37745 US

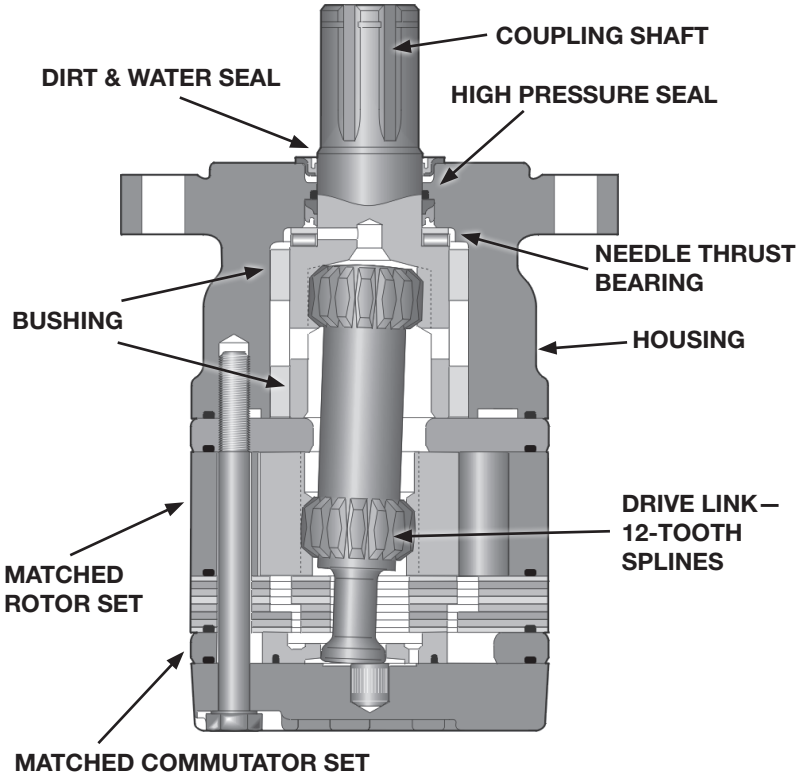

Torqmotor™ TB/TC Series features include:

- The roller vane rotor set design offers a low-friction, wear compensation which maximizes the useful performance life of the motor.
- Zero leak **commutation valve provides greater, more consistent volumetric efficiency.**
- Design flexibility - TB offers the widest selection of shaft options, displacements and mounting flanges in the industry.
- Patented 60-40 spline member arrangement transmits more torque with less weight.
- Full flow lubrication maximizes cooling and may provide up to 50% longer life than motors not having this feature.
- Higher pressure rating provide greater torque than competitive brands.
- Full interchangeability with other motors which are designed according to industry standards.
- Compatible with most hydraulic systems with regard to pressure, torque and speed.
- A unique high-pressure shaft seal that eliminates the need for case drains.
- Up to 18 horsepower output.

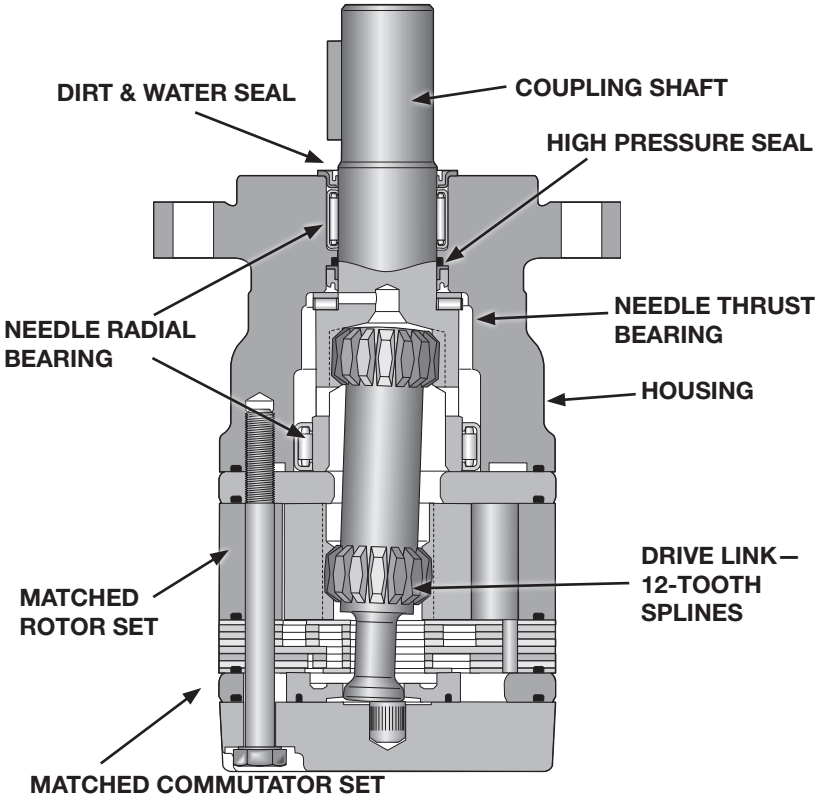

Torqmotor™ TE Series features include:

- Roller vanes to reduce friction and internal leakage and to maintain efficiency.
- Zero leak **commutation valve provides greater, more consistent volumetric efficiency.**
- Wheel mount version available.
- More starting torque than competitive motors in applications where the shaft is side loaded. (Competitive brands require more pressure to start the motor.)
- A needle-roller mounted coupling shaft and steel-caged thrust bearing which can withstand 1000-pound thrust loads.
- Side load capacity is 1600 lbs. (727.3 kg) maximum at center of output shaft.
- A unique high-pressure shaft seal that eliminates the need for case drains, check valves and extra plumbing.
- Up to 23 horsepower output.
- Greater durability due to superior lubrication and minimum drive spline wear.
- Patented 60-40 spline member arrangement transmits more torque with less weight.

Parker Hannifin Corporation
Hydraulic Pump/Motor Division
Greeneville, TN 37745 US

Torqmotor™ Design Features

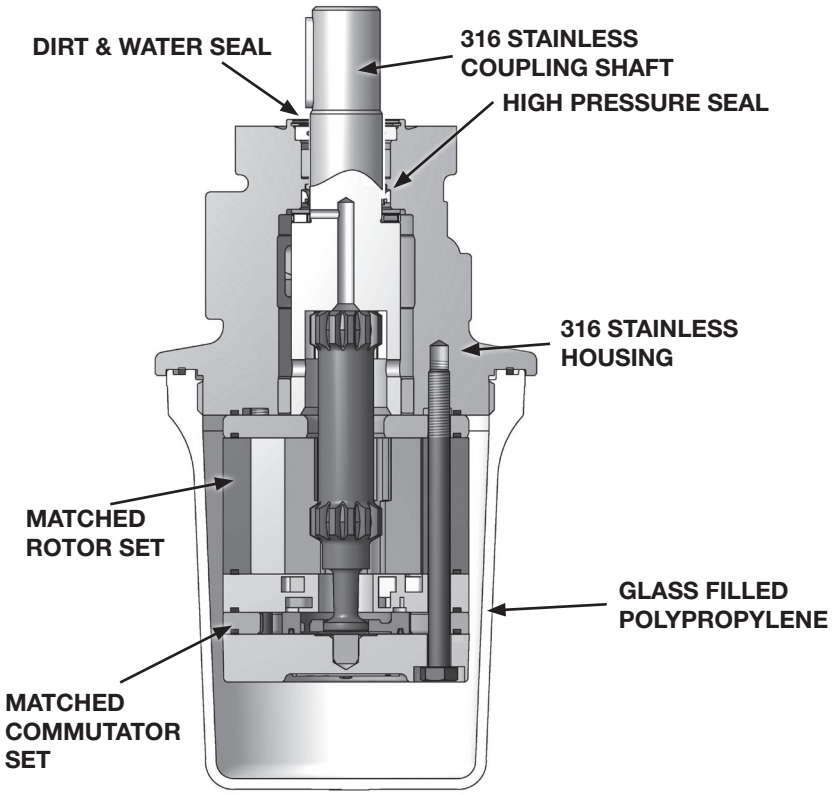

Torqmotor™ TS Series features include:

- The roller vane rotor set design offers a low-friction, wear compensation which maximizes the useful performance life of the motor.
- Zero leak **commutation valve provides greater, more consistent volumetric efficiency.**
- Design flexibility—TS offers the 316 stainless steel housing and shaft with a one-size-fits-all displacements polypropylene cover.
- Patented 60-40 spline member arrangement transmits more torque with less weight.
- Full flow lubrication maximizes cooling and may provide up to 50% longer life than motors not having this feature.
- Higher pressure rating provides greater torque than competitive brands.
- Full interchangeability with other motors which are designed according to industry standards.
- Compatible with most hydraulic systems with regard to pressure, torque and speed.
- A unique high-pressure shaft seal that eliminates the need for case drains.
- Up to 13 horsepower output.

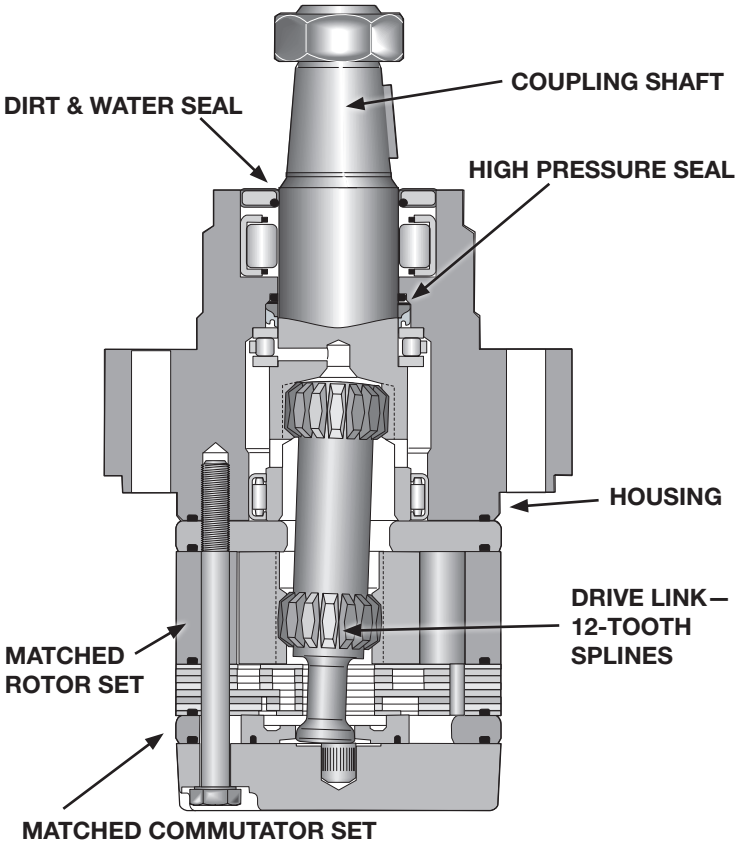

Torqmotor™ TJ Series features include:

- The roller vane rotor set design offers a low-friction, wear compensation which maximizes the useful performance life of the motor.
- Zero leak **commutation valve provides greater, more consistent volumetric efficiency.**
- Patented 60-40 spline member arrangement transmits more torque with less weight.
- Full flow lubrication maximizes cooling and may provide up to 50% longer life than motors not having this feature.
- Higher pressure rating provides greater torque than competitive brands.
- Full interchangeability with other motors which are designed according to industry standards.
- Compatible with most hydraulic systems with regard to pressure, torque and speed.
- A unique high-pressure shaft seal that eliminates the need for case drains.
- Up to 23 horsepower output.

Parker Hannifin Corporation
Hydraulic Pump/Motor Division
Greeneville, TN 37745 US

Introduction

This service manual has one purpose: to guide you in maintaining, troubleshooting, and servicing the TC, TS, TB, TE and TJ Torqmotor™ (low-speed, high-torque hydraulic motor).

Material in this manual is organized so you can work on the Torqmotor™ and get results without wasting time or being confused. To get these results, you should read this entire manual before you begin any work on the Torqmotor™.

This manual also contains troubleshooting information and checklist. If you must service the Torqmotor™, the checklist will help you to determine where the problem may be.

The three-column format of the Disassembly and Inspection, and Assembly sections will make it easier for you to conduct major work on the Torqmotor™. Column 1 gives a brief key for each procedure. Column 2 explains in detail the procedure you should follow. Column 3 illustrates this procedure with photographs. Read all material carefully and pay special attention to the notes, cautions, and warnings.

A page with the Torqmotor™ exploded assembly view is provided several places in this manual. The component part names and item numbers assigned on this exploded assembly view correspond with names and item numbers (in parentheses) used in the disassembly and assembly procedures set forth in this manual.

Service part list charts are also provided in this manual with the part names and exploded view item numbers cross referenced to Parker service part numbers.

Service parts are available through the Original Equipment Manufacturer or Parker approved TC, TS, TB, TE and TJ Distributors.

As you gain experience in servicing the Torqmotor™, you may find that some information in this manual could be clearer or more complete. If so, let us know about it. Do not try to second guess the manual. If you are stuck, contact us. Servicing the Torqmotor™ should be a safe and productive procedure, in order for the unit to deliver the reliable, long-life operation engineered into it.

Parker Hannifin Corporation
Hydraulic Pump/Motor Division
Greeneville, TN 37745 US

NOTE: Before troubleshooting any system problem, check service literature published by the equipment and/or component manufacturers. Follow their instructions, if given, for checking any component other than the Torqmotor™ unit.

Preparation

Make your troubleshooting easier by preparing as follows:

- work in a clean, well-lighted place;
- have proper tools and materials nearby;
- have an adequate supply of clean petroleum-base-solvent.

WARNING: SINCE SOLVENTS ARE FLAMMABLE, BE EXTREMELY CAREFUL WHEN USING ANY SOLVENT, EVEN A SMALL EXPLOSION OR FIRE COULD CAUSE INJURY OR DEATH.

WARNING: WEAR EYE PROTECTION AND BE SURE TO COMPLY WITH OSHA AND OTHER MAXIMUM AIR PRESSURE REQUIREMENTS.

Preliminary Checks

Hydraulic systems are often trouble-free. Hence, the problem an operator complains of could be cause by something other than the hydraulic components.

Thus, once you have determined that a problem exists, start with the easy-to-check items, such as:

- parts damaged from impact that were not properly repaired, or that should have been replaced; and
- improper replacement parts used in previous servicing
- mechanical linkage problems such as binding, broken, or loose parts or slipping belts

Hydraulic Components

If you think the problem is caused by a hydraulic component, start by checking the easy-to-reach items.

Check all hoses and lines for cracks, hardening, or other signs of wear. Reroute any usable hoses that are kinked, severely bent, or that rest against hot engine parts. Look for leaks, especially at couplings and fittings. Replace any hoses or lines that don't meet system flow and pressure ratings.

Next, go to the reservoir and filter or filters. Check fluid level and look for air bubbles. Check the filter(s). A filter with a maximum 40 micron filtration is recommended for the Torqmotor™ system.

Visually check other components to see if they are loosely mounted, show signs of leaks, or other damage or wear.

Excessive heat in a hydraulic system can create problems that can easily be overlooked. Every system has its limitation for the maximum amount of temperature. After the temperature is attained and passed, the following can occur:

- oil seal leaks
- loss of efficiency such as speed and torque
- pump loss of efficiency
- pump failure
- hoses become hard and brittle
- hose failure

A normal temperature range means an efficient hydraulic system. Consult the manuals published by equipment and/or component manufacturers for maximum allowable temperature and hydraulic tests that may be necessary to run on the performance of the hydraulic components. The Torqmotor™ is not recommended for hydraulic systems with maximum temperatures above 200°F (93.3°C).

Troubleshooting Checklist

Trouble	Cause	Remedy
Oil Leakage	1. Hose fittings loose, worn or damaged.	Check & replace damaged fittings or "O" Rings. Torque to manufacturers specifications.
	2. Oil seal rings (3) deteriorated by excess heat.	Replace oil seal rings by disassembling Torqmotor™ unit.
	3. Special bolt (1, 1A, 1B or 1C) loose or its sealing area deteriorated by corrosion.	(a) Loosen then tighten single bolt to torque specification. (b) Replace bolt.
	4. Internal shaft seal (14) worn or damaged.	Replace seal. Disassembly of Torqmotor™ unit necessary.
	5. Worn coupling shaft (10) and internal seal (14).	Replace coupling shaft and seal by disassembling Torqmotor™ unit.
Significant loss of speed under load	1. Lack of sufficient oil supply	(a) Check for faulty relief valve and adjust or replace as required. (b) Check for and repair worn pump. (c) Check for and use correct oil for temperature of operation.
	2. High internal motor leakage	Replace worn rotor set by disassembling Torqmotor™ unit.
	3. Severely worn or damaged internal splines.	Replace rotor set, drive link and coupling shaft by disassembling Torqmotor™ unit.
	4. Excessive heat.	Locate excessive heat source (usually a restriction) in the system and correct the condition.
Low mechanical efficiency or undue high pressure required to operate Torqmotor™ unit	1. Line blockage	Locate blockage source and repair or replace.
	2. Internal interference	Disassemble Torqmotor™ unit, identify and remedy cause and repair, replacing parts as necessary.
	3. Lack of pumping pressure	Check for and repair worn pump.
	4. Excessive binding or loading in system external to Torqmotor™ unit.	Locate source and eliminate cause.

CAUTION: If the hydraulic system fluid becomes overheated [in excess of 200°F (93.3°C)], seals in the system can shrink, harden or crack, thus losing their sealing ability.

Parker Hannifin Corporation
Hydraulic Pump/Motor Division
Greeneville, TN 37745 US

Tools and Materials Required for Servicing

- Clean, petroleum-based solvent
- Emery paper
- Vise with soft jaws
- Air pressure source
- Arbor press
- Screw driver
- Masking tape
- Breaker bar
- Torque wrench-ft. lbs. (N m)
- Sockets: 1/2 or 9/16 inch thin wall, 1 inch
- Allen Sockets: 3/16, 3/8 inch
- Adjustable crescent wrench or hose fitting wrenches
- SAE 10W40 SE or SF oil
- Special bearing mandrel for TC, TS, TB & TE Torqmotors (SEE FIGURE 1)
- Feeler gage .005 inch (.13 mm)
- TC, TS, TB & TE Torqmotors require blind hole bearing puller for 1.06 inch (26.9) mm) and 1.62 inch (41.1 mm) diameter bearing/bushing.
- TJ requires blind hole bearing puller for 1.400 inch diameter (35.6 mm) and 2.130 inch diameter (5.41 mm) bearing
- Clean corrosion resistant grease. Part #406018 is included in each seal kit. Recommended grease is Parker Specification #045236 or Mobil Mobilith SHC® 460

NOTE: The available service seal kits include the recommended grease as a grease pack #406018

CAUTION: Mixing greases that have different bases can be detrimental to bearing life.

Parker Hannifin Corporation
Hydraulic Pump/Motor Division
Greeneville, TN 37745 US

CONVERSIONS

INCHES	mm	INCHES	mm
.020	.51	1.060	26.92
.021	.53	1.295	32.89
.029	.74	1.297	32.94
.030	.76	1.396	35.46
.111	2.81	1.398	35.51
.119	3.02	1.620	41.15
.152	3.86	1.622	41.20
.160	4.06	1.983	50.37
.296	7.52	1.985	50.42
.304	7.72	2.120	53.85
.460	11.68	2.122	53.90
.470	11.94	2.233	56.72
.500	12.70	2.235	56.77
.585	14.86	2.483	63.07
.595	15.11	2.485	63.12
.660	16.76	2.500	63.5
.675	17.15	2.88	73.2
1.058	26.87		

Torque Chart

Part Name	Item Number	Torque
bolt 5/16 24 UNF 2A	1, 1A, 1B or 1C	25-30 ft. lbs. (33-40 N m)
bolt 5/8 18 UNF 2A	10D	140-180 ft. lbs. (190-244 N m)
nut 3/4 16 UNF 2B	27A (TC, TB, TE)	175-255 ft. lbs. (237-305 N m)
Castle nut 1-20 UNEF 2B	27A (TJ)	300-400 ft. lbs. (407-542 N m)

- TC has two steel bushing internal of housing press first steel bushing 1.223 deep from housing face the second steel bushing press .03 below face

(Fabricate if considered necessary)
Figure 1 – TC, TS, TB & TE

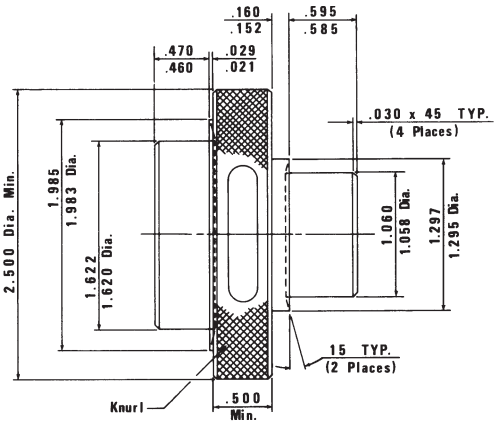

(Fabricate if considered necessary)
Figure 2 – TJ

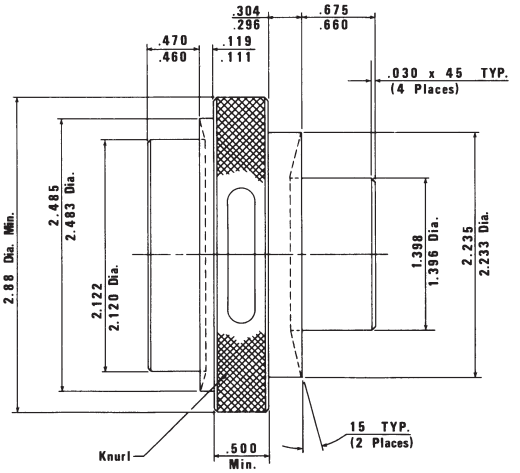

Parker Hannifin Corporation
Hydraulic Pump/Motor Division
Greeneville, TN 37745 US

Torqmotor™ Exploded View

Typical Assembly

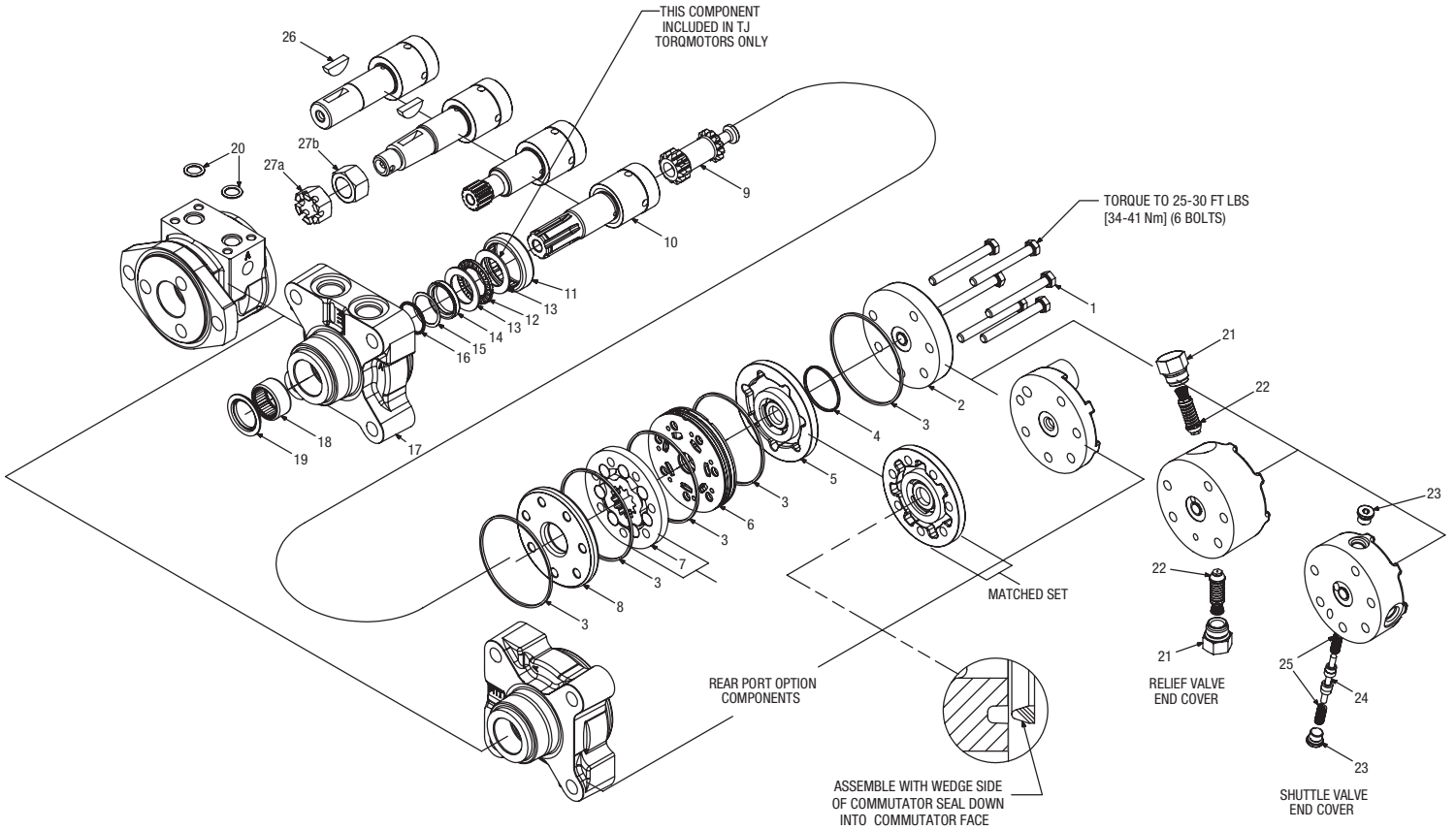

Item No.	Description	Item No.	Description
1.	Special Bolt (6)	15.	Back Up Washer
2.	End Cover	16.	Back Up Ring
3.	Seal Ring (5)	17.	Housing
4.	Seal Ring-Commutator	18.	Steel Bushing
5.	Commutator Assembly (Matched Set)	19.	Dirt & Water Seal
6.	Manifold	20.	O-Ring (2)
7.	Rotor Set (Matched Set)	21.	Plug (2)
8.	Wear Plate	22.	Relief Valve (2)
9.	Drive Link	23.	Plug (2)
10.	Coupling Shaft	24.	Shuttle Valve
11.	Steel Bushing	25.	Spring (2)
12.	Thrust Bearing	26.	Key
13.	Thrust Washer (TJ Series Qty=2)	27a.	Castle Nut
14.	Shaft Seal	27b.	Patch Nut

Parker Hannifin Corporation
Hydraulic Pump/Motor Division
Greeneville, TN 37745 US

Parker Hannifin Corporation
Hydraulic Pump/Motor Division
Greeneville, TN 37745 US

In July 2012, a change was made to our small frame (Series TC, TS, TB, TE and TJ) low speed high torque Torqmotors™.

The motors are comprised of six sections. There is a seal between each section to resist external leakage. The design of the motor dictates that it be assembled from front (shaft end) to rear. This means that the motor must be assembled shaft down. Some of the O-ring grooves in the current design are facing down during assembly. To keep the O-rings in place during assembly, they are coated with grease.

After assembly, this grease can seep out. This is often misdiagnosed as external hydraulic fluid leakage, causing the customer to think that the motor is faulty. It also can cause problems when the motor is painted.

To correct this problem, we have re-positioned the section O-ring grooves on five of the six parts (all but the front housing) so that the O-ring grooves are all facing up during assembly. It will now be possible to install the O-rings dry, eliminating the problem.

The part numbers of the five re-designed parts will change, but the complete model number (TE0080AS100AAAA etc) will not change. The change occurred on July 1, 2012. The new design is identified by the Julian date code on the motor. All TC, TS, TB, TE and TJ motors dated after Julian date 183-12 (183rd day of 2012) will be of the newer design. Seals and seal kits will be unaffected. Typical model number changes and seal groove locations are illustrated on page 15.

Made before July 1, 2012

Made on or after July 1, 2012

Notice: For individual part numbers for these series TC, TS, TB, TE and TJ prior to manufactory date code of 182-2012 please refer to the parts list on pages 18-26.

Torqmotor™ Exploded View

TC, TB, TE and TJ Assembly before July 1, 2012

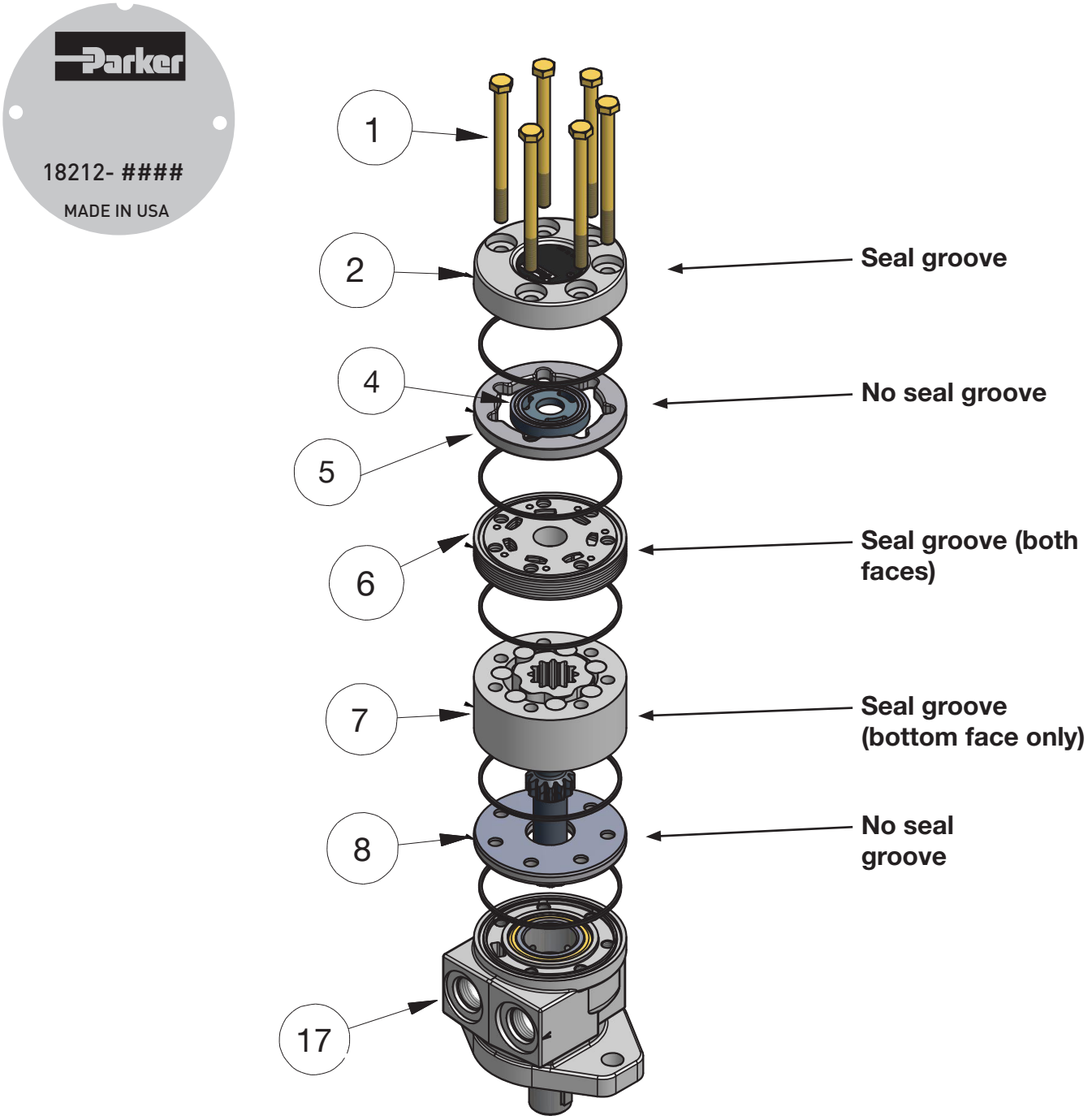

Parker Hannifin Corporation
Hydraulic Pump/Motor Division
Greeneville, TN 37745 US

TC, TB, TE and TJ Assembly on or after July 1, 2012

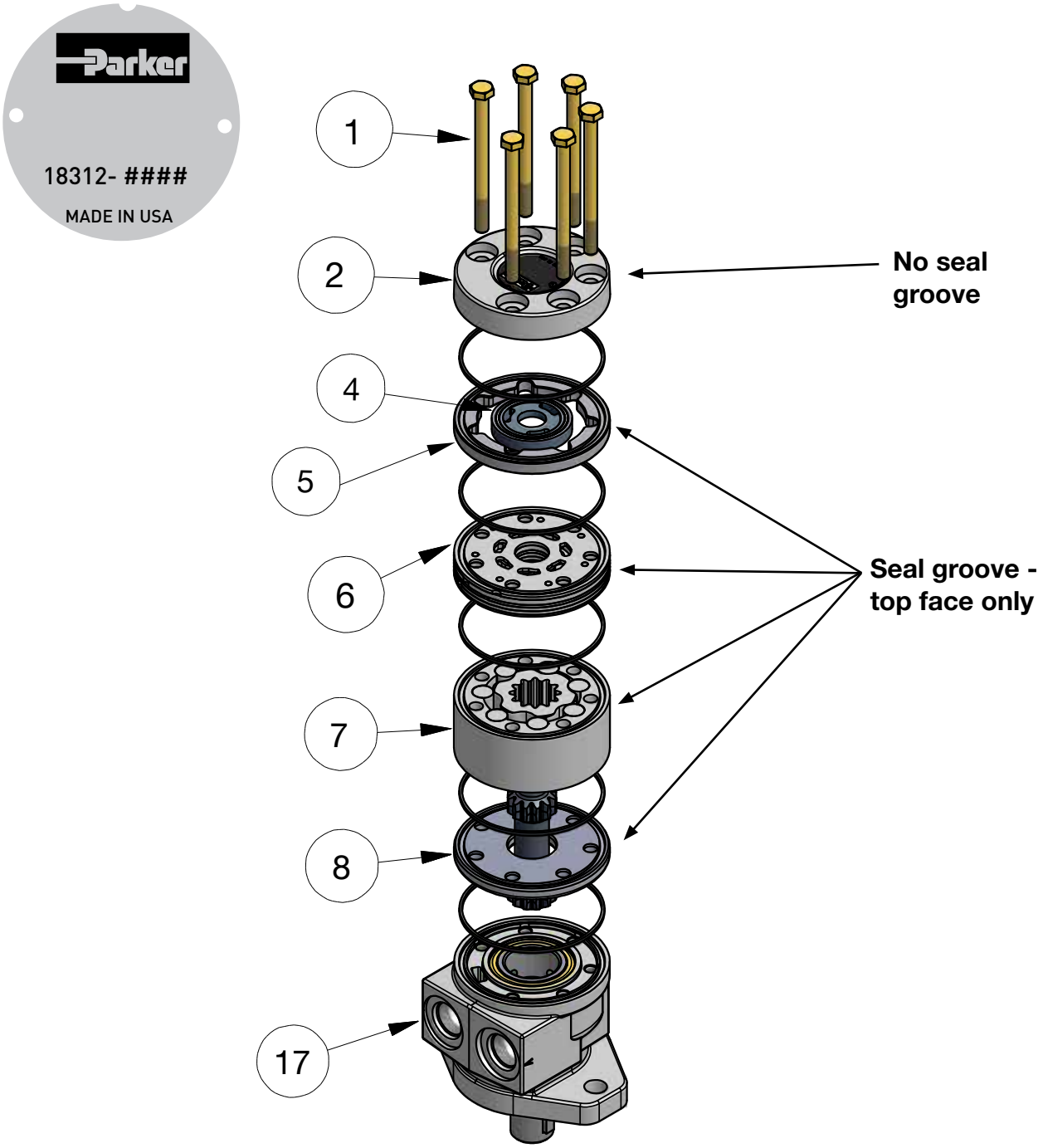

Item	QTY	New Part #	Old Part #	Description
8	1	477376	477341	Wear Plate
7	1	TE127003	MF127003	Rotor Set
6	1	TE015000	MF015000	Manifold
4 & 5	1	TE018000A1	MF018000A1	Commutator Assembly
2	1	TE016000	MF016007	End Cover

Torqmotor™ Exploded View

TS Series Assembly before July 1, 2012

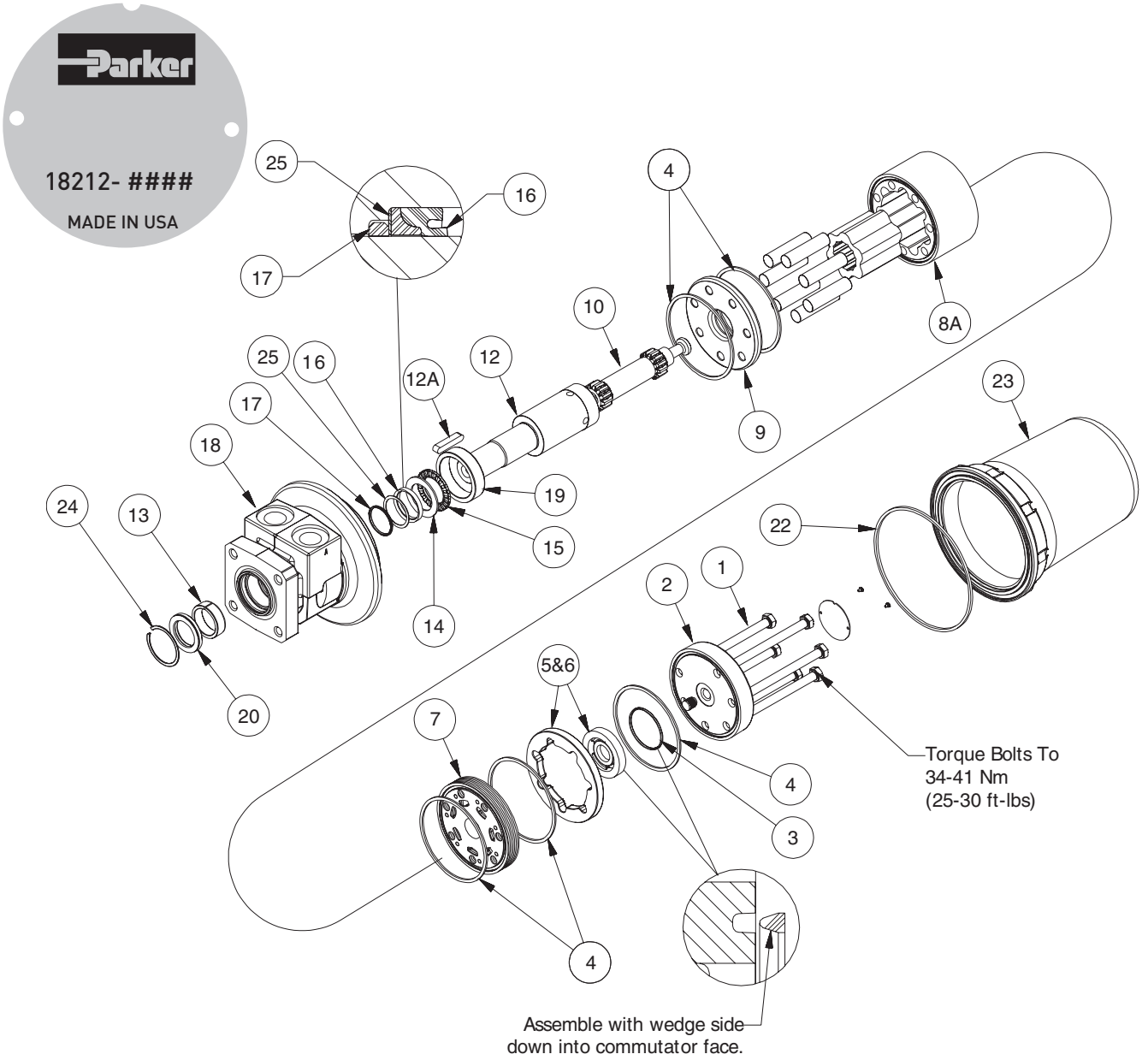

Item No.	Description	Item No.	Description	Item No.	Description
1.	Special Bolt (6)	9.	Wear Plate	17.	Back Up Ring
2.	End Cover	10.	Drive Link	18.	Housing
3.	Seal Ring-Commutator	12.	Coupling Shaft	19.	Steel Bushing
4.	Seal Ring (5)	12A.	Stainless Key	20.	Dirt & Water Seal
5 & 6.	Commutator Assembly (Matched Set)	13.	Steel Bushing	22.	Cover O-Ring
		14.	Thrust Washer	23.	Protective Cover
7.	Manifold	15.	Thrust Bearing	24.	Snap Ring
8A.	Rotor Set (Matched Set)	16.	Shaft Seal	25.	Back Up Washer

Parker Hannifin Corporation
Hydraulic Pump/Motor Division
Greeneville, TN 37745 US

Torqmotor™ Exploded View

TS Series Assembly on or after July 1, 2012

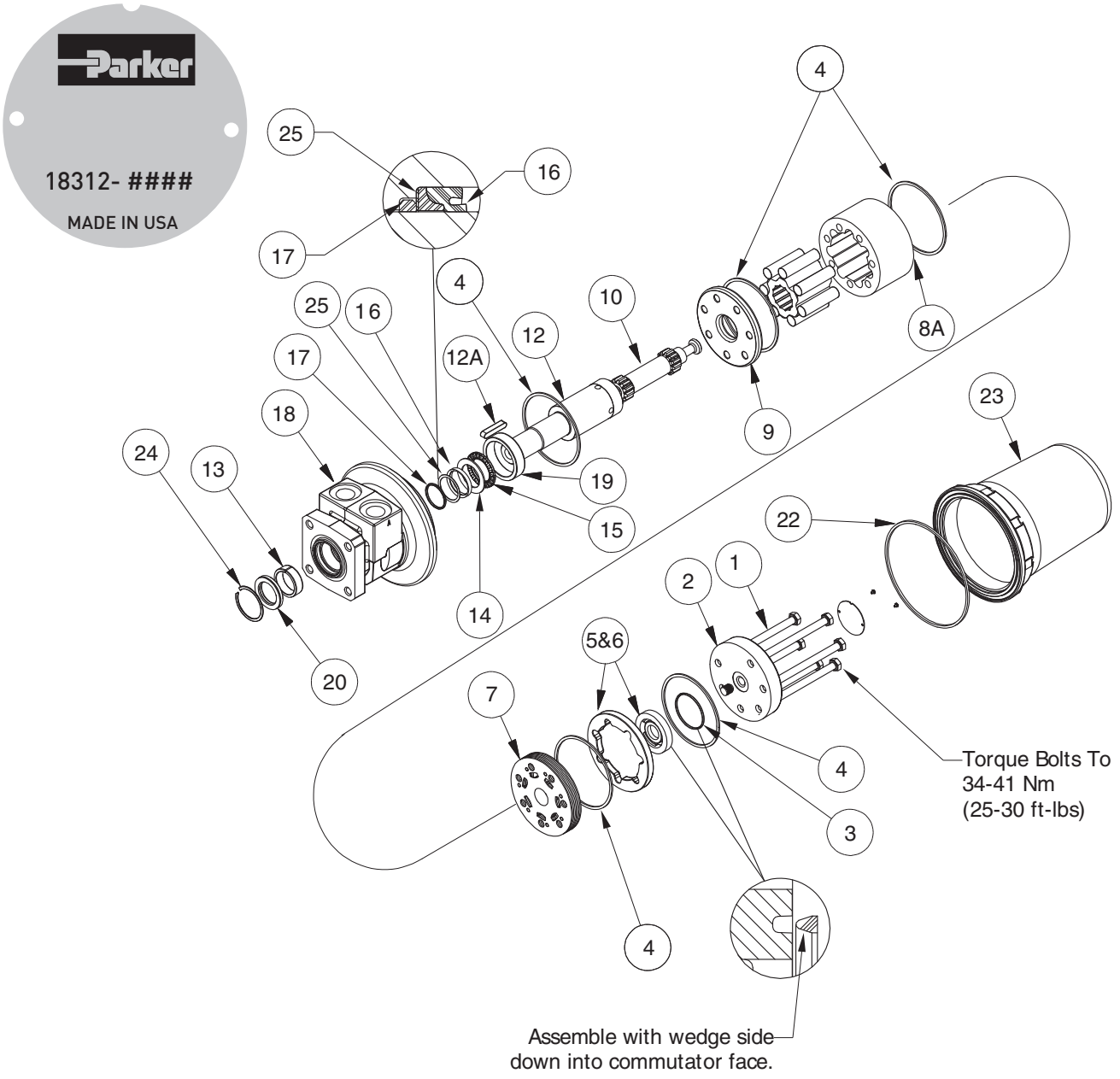

Item No.	Description	Item No.	Description	Item No.	Description
1.	Special Bolt (6)	9.	Wear Plate	17.	Back Up Ring
2.	End Cover	10.	Drive Link	18.	Housing
3.	Seal Ring-Commutator	12.	Coupling Shaft	19.	Steel Bushing
4.	Seal Ring (5)	12A.	Stainless Key	20.	Dirt & Water Seal
5 & 6.	Commutator Assembly (Matched Set)	13.	Steel Bushing	22.	Cover O-Ring
		14.	Thrust Washer	23.	Protective Cover
7.	Manifold	15.	Thrust Bearing	24.	Snap Ring
8A.	Rotor Set (Matched Set)	16.	Shaft Seal	25.	Back Up Washer

Parker Hannifin Corporation
Hydraulic Pump/Motor Division
Greeneville, TN 37745 US

TC Service Parts List Chart

Chart Use Example:
TC0045AS010AAAB Torqmotor™ includes part numbers listed to the right of TC (SERIES), 0045 (DISP.), AS (MOUNTING/ PORTING), 01(SHAFT), 0 (ROTATION), and AAAB (OPTION) shown in the left hand column of the chart.

Caution:
The charted component service information is for the Torqmotors listed only. Refer to the original equipment manufacturer of the equipment using the Torqmotor for assembly numbers not listed below.

SERIES	EXPLODED VIEW ITEM #	5	6	8	11	13	12	16	18	19	15
	DESCRIPTION	COMMUTATOR & RING ASSY	MANIFOLD (SEE NOTE)	WEAR PLATE	STEEL BUSHING	THRUST WASHER	THRUST BEARING	BACKUP RING	STEEL BUSHING	DIRT & WATER SEAL	BACKUP WASHER
TC-	Service Part #	TE018000A1	TE015000	477376	069511*	028483	065066	028516		478036	028552

(*quantity 2)

EXPLODED VIEW (Select Item # Bolt Per Option Group)

DISPLACEMENT GROUP	ITEM #	1 OR	1A OR	1C	ROTOR THICKNESS	7A	7B	9	"L" Dim
	DISPLACEMENT (in3/rev)	BOLT # (BOLT LENGTH - 5 bolts required)			"L" DIM OF ROTOR THICKNESS	ROTOR SET	FREE RUNNING ROTOR SET††	DRIVE LINK	Overall Length
	0036-2.2	**021356** (2.625)			**.2750**	TE017003	TE017005	MF013000	**2.975**
	0045-2.7	**021311** (2.750)	**021443** (3.440)	**021308** (3.875)	**.3169**	TE027003	TE027005	MF023000	**3.021**
	0050-3.0	**021311** (2.750)	**021444** (3.500)	**021308** (3.875)	**.3751**	TE037003	TE037005	MF033000	**3.080**
	0065-4.0	**021306** (2.875)	**021358** (3.625)	**021435** (4.000)	**.5001**	TE047003	TE047005	MF043000	**3.206**
	0080-5.0	**021382** (3.000)	**021438** (3.750)	**021359** (4.125)	**.6258**	TE057003	TE057005	MF053000	**3.334**
	0100-6.0	**021357** (3.125)	**021308** (3.875)	**021445** (4.250)	**.7508**	TE067003	TE067005	MF063000	**3.460**
	0130-8.0	**021307** (3.375)	**021359** (4.125)	**021439** (4.500)	**1.0008**	TE087003	TE087005	MF083000	**3.712**
	0165-9.9	**021358** (3.625)	**021310** (4.375)	**021384** (4.875)	**1.2508**	TE107003	TE107005	MF103000	**3.969**
	0195-11.9	**021308** (3.875)	**021383** (4.625)	**021465** (5.000)	**1.5008**	TE127003	TE127005	MF123000	**4.215**
	0230-13.9	**021359** (4.125)	**021384** (4.875)	**021460** (5.250)	**1.7508**	TE147003	TE147005	MF143000	**4.467**
	0260-15.9	**021310** (4.375)	**021446** (5.125)	**021467** (5.750)	**2.0008**	TE167003	TE167005	MF163000	**4.718**
	0295-17.9	**021383** (4.625)	**021414** (5.375)	**021467** (5.750)	**2.2508**	TE187003	TE187005	MF183000	**4.970**
	0330-20.0	**021384** (4.875)	**021459** (5.625)	**021448** (6.000)	**2.5008**	TE207003	TE207005	MF203000	**5.220**
	0365-22.6	**021460** (5.250)	**021448** (6.000)	**021469** (6.375)	**2.8406**	TE227003	N/A	MF223000	**5.557**
	0390-24.0	**021414** (5.375)	**021449** (6.125)	**021464** (6.531)	**3.0030**	TE247003	N/A	MF243000	**5.716**

†† Free running rotorset is not available in 0365 or 0390 displacements.

* Not released.

TC has two steel bushing press internal of housing.

HOUSING GROUP	Mounting Code / Porting Code	EXPLODED VIEW ITEM #		2	[1,2]17	[A]20
		DESCRIPTION MOUNTING	PORTING	END COVER	HOUSING SERVICE PART #	O-RING (2)
FRONT PORTING	AT-	SAE A (2 Bolt)	1/2" BSPF	TB016000	ML012012A1	
	AS-	SAE A (2 Bolt)	7/8" O-Ring	TB016000	ML012001A1	
	FS-	4 Bolt	7/8" O-Ring	TB016000	ML012005A1	
	AM-	SAE A (2 Bolt)	Manifold	TB016000	ML012008A1	032790
	FM-	4 Bolt	Manifold	TB016000	ML012006A1	032790
	AP-	SAE A (2 Bolt)	1/2" NPTF	TB016000	ML012002A1	
	FP-	4 Bolt	1/2" NPTF	TB016000	ML012007A1	
	FF-	4 Bolt	3/4" O-Ring	TB016000	ML012013A1	

Parker Hannifin Corporation
Hydraulic Pump/Motor Division
Greeneville, TN 37745 US

TC Service Parts List Chart

COUPLING SHAFT GROUP	EXPLODED VIEW ITEM #		10		
		DESCRIPTION	COUPLING SHAFT	WOODRUFF KEY	NUT
	01-	Long 6B Snapwire Groove	ML019010		
	09-	1” Ø, 0.38 Pinhole, 0.55” from end	ML019005		
	10-	1” Short Woodruff Key 1/4” Tap	ML019002	038015 (1/4x1)	
	11-	1” Short 6B Spline, 1/4” Snapwire Groove	ML019001		
	13-	1” Long Woodruff Snapwire Groove	ML019006	038015 (1/4x1)	
	15-	1” Ø, 0.32 Pinhole 0.4” from end	ML019011		
	21-	“-10 Code” plus Corrosion Resistant Nitrotec	ML019008		
	26-	25 mm Straight with 8 mm Keyway	ML019003	039047 (8mmx7mm)	
	28-	13 Tooth Spline 16/32 Pitch	ML019007		
	72-	Short Woodruff Key 1/4” Tap	ML019009	038015 (1/4x1)	

OPTION GROUP	EXPLODED VIEW ITEM #			2	4	3	14	23	20	25	24 & 25
		DESCRIPTION	BOLTS (5)	END COVER	COMMUTATOR SEAL	SEAL RING (5)	INNER SEAL	PLUG & O-RING ASSY	O-RING	SPRING	VALVE W/SPRING
	AAAB	No Paint	Item #1		032435	032821	032378				
	AAAC	Corrosion Resistant Paint	Item #1		032435	032821	032378				
	AAAH	Fluorocarbon Seals	Item #1		032435	032822	032809				
	BBCK	1740 PSI Internal Bidirectional Relief, No Paint	Item #1C	TE016006A7	032435	032821	032378	411068A1	032750	401660	4100107
	BBCM	1200 PSI Internal Bidirectional Relief, No Paint	Item #1C	TE016006A31	032435	032821	032378	411068A1	032750	401660	41001031
	BBCN	2030 PSI Internal Bidirectional Relief, No Paint	Item #1C	TE016006A5	032435	032821	032378	411068A1	032750	401660	4100105
	BBCP	1450 PSI Internal Bidirectional Relief, No Paint	Item #1C	TE016006A10	032435	032821	032378	411068A1	032750	401660	41001010
	BBCT	1560 PSI Internal Bidirectional Relief, No Paint	Item #1C	TE016006A2	032435	032821	032378	411068A1	032750	401660	4100102
	BBCP	1450 PSI Internal Bidirectional Relief, No Paint	Item #1C	TE016006A10	032435	032821	032378	411068A1	032750	401660	41001010
	AAJV	Bidirectional Shuttle Valve (3:30), Black Paint	Item #1A	TE016003A1	032435	032821	032378	036297	032750	401660	415603
	AABW	Fluorocarbon Seal, Double Paint	Item #1	TB016000	032435	032821	032378				
	AAAG	Fluorocarbon Seals, Black Paint	Item #1	TB016000	032435	032821	032378				
	AABJ	Free Running Rotor Set, Black Paint	Item #1	TB016000	032435	032821	032378				
	AABK	Free Running Rotor Set, No Paint	Item #1	TB016000	032435	032821	032378				

[1] Service housing assembly ITEM #17 with part number suffix-J2 includes ITEMS #11, #16, #15, #14, #13, #12 and #19.

[2] Order (2) #032790 ITEM #17A for service housing assembly where manifold ports are used.

Standard seal kit #SK000090 includes six #032821 seal rings, #032435 commutator seal, #032378 inner seal, #028516 back up washer, #478036 dirt & water seal, #406018 grease pack, bulletin #050015 and 028552 steel backup washer.

Special seal kit #SK000091 for units that use fire retardant fluids include six #032822 seal rings, #032435 commutator seal, #032809 inner seal, #028516 back up washer, #478036 dirt & water seal, #406018 grease pack, bulletin #050015 and 028552 steel backup washer.

High Temp commutator seal 032861.

For reverse timed manifold, use TE015001.

* Speed sensor not available in TC Series.

High Temp commutator seal kit #SK000100 includes six #032821 seal rings, #032861 commutator seal, #032378 inner seal, #028516 back up washer, #478036 dirt & water seal, #406018 grease pack, #bulletin 050015 and #028552 steel backup washer.

High Temp commutator/Fluorocarbon shaft seal kit #SK000230 includes six #032821 seal rings, #032861 High Temp commutator seal, #032809 Fluorocarbon shaft seal, #028516 back-up washer, #478036 dirt and water seal, #406018 grease pack, bulletin 050015 and #028552 steel back-up washer.

Parker Hannifin Corporation
Hydraulic Pump/Motor Division
Greeneville, TN 37745 US

TS Service Parts List Chart

Chart Use Example:
TS0045FS770AAXH Torqmotor™ includes part numbers listed to the right of TS (SERIES), 0045 (DISP.), FS (MOUNTING/PORTING), 77(SHAFT), 0 (ROTATION), and AAXH (OPTION) shown in the left hand column of the chart.

Caution:
The charted component service information is for the Torqmotors listed only. Refer to the original equipment manufacturer of the equipment using the Torqmotor for assembly numbers not listed below.

SERIES	EXPLODED VIEW ITEM #	5	7	9	13	14	15	17	19	20	25
	DESCRIPTION	COMMUTATOR & RING ASSY	MANIFOLD (SEE NOTE)	WEAR PLATE	STEEL BUSHING	THRUST WASHER	THRUST BEARING	BACKUP RING	STEEL BUSHING	DIRT & WATER SEAL	BACKUP WASHER
TS-	Service Part #	TE018000A1	TE015000	477376	069511	028483	065066	028516	065071	478010	028552

DISPLACEMENT GROUP	EXPLODED VIEW ITEM #	1	ROTOR THICKNESS	8A	8B	10	"L" Dim
	DISPLACEMENT (in³/rev)	BOLT # (BOLT LENGTH - 6 bolts required)	"L" DIM OF ROTOR THICKNESS	ROTOR SET	FREE RUNNING ROTOR SET††	DRIVE LINK	Overall Length
0036-	2.2	**021356** (2.625)	**.2750**	TE017003	TE017005	MF013000	**2.975**
0045-	2.7	**021311** (2.750)	**.3169**	TE027003	TE027005	MF023000	**3.021**
0050-	3.0	**021311** (2.750)	**.3751**	TE037003	TE037005	MF033000	**3.080**
0065-	4.0	**021306** (2.875)	**.5001**	TE047003	TE047005	MF043000	**3.206**
0080-	5.0	**021382** (3.000)	**.6258**	TE057003	TE057005	MF053000	**3.334**
0100-	6.0	**021357** (3.125)	**.7508**	TE067003	TE067005	MF063000	**3.460**
0130-	8.0	**021307** (3.375)	**1.0008**	TE087003	TE087005	MF083000	**3.712**
0165-	9.9	**021358** (3.625)	**1.2508**	TE107003	TE107005	MF103000	**3.969**
0195-	11.9	**021308** (3.875)	**1.5008**	TE127003	TE127005	MF123000	**4.215**
0230-	13.9	**021359** (4.125)	**1.7508**	TE147003	TE147005	MF143000	**4.467**
0260-	15.9	**021310** (4.375)	**2.0008**	TE167003	TE167005	MF163000	**4.718**
0295-	17.9	**021383** (4.625)	**2.2508**	TE187003	TE187005	MF183000	**4.970**
0330-	20.0	**021384** (4.875)	**2.5008**	TE207003	TE207005	MF203000	**5.220**
0365-	22.6	**021460** (5.250)	**2.8406**	TE227003	N/A	MF223000	**5.557**
0390-	24.0	**021414** (5.375)	**3.0030**	TE247003	N/A	MF243000	**5.716**

†† Free running rotorset is not available in 0365 or 0390 displacements.
* Not released.

HOUSING GROUP — FRONT PORTING ONLY

Mounting Code / Porting Code	EXPLODED VIEW ITEM #		2	18	4	16
	DESCRIPTION MOUNTING	PORTING	6 BOLT END COVER	HOUSING SERVICE PART	O-RING (5)	SHAFT SEAL
FS-	4 Bolt	7/8" O-Ring	TB016000	TS012201A2	032822	032809

STAINLESS STEEL COUPLING SHAFT GROUP

	EXPLODED VIEW ITEM #	12	12A	23	24	22
	DESCRIPTION	COUPLING SHAFT	STAINLESS KEY	PROTECTIVE COVER	RETAINING RING	COVER O-RING
77-	1" Dia. 1/4" Square Key, 1/4"-20 Tap	TS019400	039053 (1/4x1/4x1.33)	420007	401083	032013

OPTION GROUP

	EXPLODED VIEW ITEM #	3	22	23
	DESCRIPTION	COMMUTATOR SEAL	COVER O-RING	PROTECTIVE COVER
AAXH	Fluorocarbon (Viton) Dirt & Water Seal, Protective Motor Cover w/Fluorocarbon (Viton) Seal, Stainless Steel Housing & Shaft, Fluorocarbon (Viton) (Body & Shaft Seals), High Temp Commutator Seal, No Paint	032861	032013	420007
AAXW	Fluorocarbon (Viton) Dirt & Water Seal, Protective Motor Cover w/Fluorocarbon (Viton) Seal, Stainless Steel Housing & Shaft, Fluorocarbon (Viton) (Body & Shaft Seals), High Temp Commutator Seal, High Temp Thrust Bearing, No Paint	032861	032013	420007

Parker Hannifin Corporation
Hydraulic Pump/Motor Division
Greeneville, TN 37745 US

TB Service Parts List Chart

Chart Use Example:
TB0045AS010AAAB Torqmotor™ includes part numbers listed to the right of TB (SERIES), 0045 (DISP.), AS (MOUNTING/PORTING), 01(SHAFT), 0 (ROTATION), and AAAB (OPTION) shown in the left hand column of the chart.

Caution:
The charted component service information is for the Torqmotors listed only. Refer to the original equipment manufacturer of the equipment using the Torqmotor for assembly numbers not listed below.

SERIES	EXPLODED VIEW ITEM #	5	6	8	11	13	12	16	18	19	15
	DESCRIPTION	COMMUTATOR & RING ASSY	MANIFOLD (SEE NOTE)	WEAR PLATE	BRONZE BUSHING	THRUST WASHER	THRUST BEARING	BACKUP RING	"DU" BEARING	DIRT & WATER SEAL	BACKUP WASHER
TB-	Service Part #	TE018000A1	TE015000	477376	069511	028483	065066	028516	065505	478036	028552

DISPLACEMENT GROUP	EXPLODED VIEW (Select Item # Bolt Per Option Group) ITEM #	1 OR	1A OR	1C	ROTOR THICKNESS	7A	7B	9	"L" Dim
	DISPLACEMENT (in3/rev)	BOLT # (BOLT LENGTH - 5 bolts required)†			"L" DIM OF ROTOR THICKNESS	ROTOR SET	FREE RUNNING ROTOR SET††	DRIVE LINK	Overall Length
	0036-2.2	**021356** (2.625)			**.2750**	TE017003	TE017005	MF013000	**2.975**
	0045-2.7	**021311** (2.750)	**021443** (3.440)	**021308** (3.875)	**.3169**	TE027003	TE027005	MF023000	**3.021**
	0050-3.0	**021311** (2.750)	**021444** (3.500)	**021308** (3.875)	**.3751**	TE037003	TE037005	MF033000	**3.080**
	0065-4.0	**021306** (2.875)	**021358** (3.625)	**021435** (4.000)	**.5001**	TE047003	TE047005	MF043000	**3.206**
	0080-5.0	**021382** (3.000)	**021438** (3.750)	**021359** (4.125)	**.6258**	TE057003	TE057005	MF053000	**3.334**
	0100-6.0	**021357** (3.125)	**021308** (3.875)	**021445** (4.250)	**.7508**	TE067003	TE067005	MF063000	**3.460**
	0130-8.0	**021307** (3.375)	**021359** (4.125)	**021439** (4.500)	**1.0008**	TE087003	TE087005	MF083000	**3.712**
	0165-9.9	**021358** (3.625)	**021310** (4.375)	**021384** (4.875)	**1.2508**	TE107003	TE107005	MF103000	**3.969**
	0195-11.9	**021308** (3.875)	**021383** (4.625)	**021465** (5.000)	**1.5008**	TE127003	TE127005	MF123000	**4.215**
	0230-13.9	**021359** (4.125)	**021384** (4.875)	**021460** (5.250)	**1.7508**	TE147003	TE147005	MF143000	**4.467**
	0260-15.9	**021310** (4.375)	**021446** (5.125)	**021467** (5.750)	**2.0008**	TE167003	TE167005	MF163000	**4.718**
	0295-17.9	**021383** (4.625)	**021414** (5.375)	**021467** (5.750)	**2.2508**	TE187003	TE187005	MF183000	**4.970**
	0330-20.0	**021384** (4.875)	**021459** (5.625)	**021448** (6.000)	**2.5008**	TE207003	TE207005	MF203000	**5.220**
	0365-22.6	**021460** (5.250)	**021448** (6.000)	**021469** (6.375)	**2.8406**	TE227003	N/A	MF223000	**5.557**
	0390-24.0	**021414** (5.375)	**021449** (6.125)	**021464** (6.531)	**3.0030**	TE247003	N/A	MF243000	**5.716**

† Bolts for TB Series front ported units are the same as rear ported units if you are using the same displacement.

†† Free running rotorset is not available in 0365 or 0390 displacements.

* Not released.

HOUSING GROUP	Mounting Code Porting Code	EXPLODED VIEW ITEM #		2	[1,2]17	[A]20
FRONT PORTING		DESCRIPTION MOUNTING	PORTING	END COVER	HOUSING SERVICE PART #	O-RING (2)
	MS-	Standard (4 Bolt)	7/8" O-Ring	TB016000	MF012014A2	
	AS-	SAE A (2 Bolt)	7/8" O-Ring	TB016000	MF012001A2	
	FS-	4 Bolt	7/8" O-Ring	TB016000	MF012003A2	
	AM-	SAE A (2 Bolt)	Manifold	TB016000	MF012004A2	032790
	FM-	4 Bolt	Manifold	TB016000	MF012005A2	032790
	MM-	Standard (4 Bolt)	Manifold	TB016000	MF012049A2	032790
	AP-	SAE A (2 Bolt)	1/2" NPTF	TB016000	MF012006A2	
	FP-	4 Bolt	1/2" NPTF	TB016000	MF012007A2	
	AT-	SAE A (2 Bolt)	1/2" BSPF	TB016000	MF012011A2	
	BP-	SAE B (2 Bolt)	1/2" NPTF	TB016000	MF012073A2	

HOUSING GROUP	Mounting Code Porting Code	EXPLODED VIEW ITEM #		2	[1,B]17	20
REAR PORTING		DESCRIPTION MOUNTING	PORTING	END COVER	HOUSING SERVICE PART #	O-RING (2)
	AR-	SAE A (2 Bolt)	Rear (3/4"-16 SAE O-Ring)	TE016001	MF012008A2	
	FR-	4 Bolt	Rear (3/4"-16 SAE O-Ring)	TE016001	MF012010A2	
	BR-	SAE B (2 Bolt)	Rear (3/4"-16 SAE O-Ring)	TE016001	MF012076A2	

Parker Hannifin Corporation
Hydraulic Pump/Motor Division
Greeneville, TN 37745 US

TB Service Parts List Chart

COUPLING SHAFT GROUP

	EXPLODED VIEW ITEM #	10		
	DESCRIPTION	COUPLING SHAFT	WOODRUFF KEY	NUT
01-	Long 6B Snapwire Groove	MF019007		
09-	1" Ø, 0.38 Pinhole, 0.55" from end	MF019000		
10-	1" Short Woodruff Key 1/4" Tap	MF019006	038015 (1/4x1)	
11-	1" Short 6B Spline, 1/4" Snapwire Groove	MF019003		
12-	1" Tapered (Short)	MF019004	038015 (1/4x1)	025136
13-	1" Long Woodruff Snapwire Groove	MF019005	038015 (1/4x1)	
14-	1" Ø, Double Pinhole	MF019001		
15-	1" Ø, 0.32 Pinhole 0.4" from end	MF019002		
21-	"-10 Code" plus Corrosion Resistant	MF019008		
22-	25 mm Straight with 7 mm Keyway, 6 mm Tap	MF019009	039041	
23-	Short 6B Spline 5/16" Tap	MF019010		
25-	1" Tapered SAE	MF019011	038015 (1/4x1)	025136
26-	25 mm Straight with 8 mm Keyway	MF019012	039047 (8mmx7mm)	
28-	13 Tooth Spline	MF019014		
29-	1" Taper 3/4-16 Thread	MF019015		
33-	1" Tapered, 3/16 Key, 3/4-16 Thd	MF019016	038014 (3/16x3/4)	025156 Slotted Nut
40-	Short Wood, 6mm Tap	MF019021		
50-	1" w.406 dia pinhole .62 from end 1/4-20 Tap	MF019032		
66-	26 code plus Nitrotec C	MF019044		
69-	25mm Straight w/8mm key 8mm Tap Stainless Steel	MF019412		
70-	1" Dia. Short Woodkey 1/4" Tap Stainless Steel	MF019406		

OPTION GROUP

	EXPLODED VIEW ITEM #		2	4	3	14	23	20	25	24 & 25
	DESCRIPTION	BOLTS (5)	END COVER	COMMUTATOR SEAL	SEAL RING (5)	INNER SEAL	PLUG & O-RING ASSY	O-RING	SPRING	VALVE W/SPRING
AAAB	No Paint	Item #1		032435	032821	032378				
AAAC	Corrosion Resistant Paint	Item #1		032435	032821	032378				
AAAH	Fluorocarbon Seals	Item #1		032435	032822	032809				
BBCK	1740 PSI Internal Bidirectional Relief, No Paint	Item #1C	TE016006A7	032435	032821	032378	411068A1	032750	401660	4100107
BBCM	1200 PSI Internal Bidirectional Relief, No Paint	Item #1C	TE016006A31	032435	032821	032378	411068A1	032750	401660	41001031
BBCN	2030 PSI Internal Bidirectional Relief, No Paint	Item #1C	TE016006A5	032435	032821	032378	411068A1	032750	401660	4100105
BBCP	1450 PSI Internal Bidirectional Relief, No Paint	Item #1C	TE016006A10	032435	032821	032378	411068A1	032750	401660	41001010
BBCT	1560 PSI Internal Bidirectional Relief, No Paint	Item #1C	TE016006A2	032435	032821	032378	411068A1	032750	401660	4100102
BBCP	1450 PSI Internal Bidirectional Relief, No Paint	Item #1C	TE016006A10	032435	032821	032378	411068A1	032750	401660	41001010
AAJV	Bidirectional Shuttle Valve (3:30), Black Paint	Item #1A	TE016003A1	032435	032821	032378	036297	032750	401660	415603

Note: Rear ported TB motors have 5 bolts at the back end cover.

[1] Service housing assembly ITEM #17 with part number suffix-A2 includes ITEM #11 and #18.

[2] Order (2) #032790 ITEM #17A for service housing assembly where manifold ports are used.

Standard seal kit #SK000090 includes six #032821 seal rings, #032435 commutator seal, #032378 inner seal, #028516 back up washer, #478036 dirt & water seal, #406018 grease pack, bulletin #050015 and 028552 backup washer.

Special seal kit #SK000091 for units that use fire retardant fluids include six #032822 seal rings, #032435 commutator seal, #032809 inner seal, #028516 back up washer, #478036 dirt & water seal, #406018 grease pack, bulletin #050015 and 028552 backup washer.

High Temp commutator seal 032861.

For reverse timed manifold, use TE015001.

* Speed sensor not available in TB Series.

Commutator set for rear ported units TE018001A1

High Temp commutator seal kit #SK000100 includes six #032821 seal rings, #032861 commutator seal, #032378 inner seal, #028516 back up washer, #478036 dirt & water seal, #406018 grease pack, #bulletin 050015 and #028552 steel backup washer.

High Temp commutator/Viton shaft seal kit #SK000230 includes six #032821 seal rings, #032861 High Temp commutator seal, #032809 Viton shaft seal, #028516 back-up washer, #478036 dirt and water seal, #406018 grease pack, bulletin 050015 and #028552 steel back-up washer.

Parker Hannifin Corporation
Hydraulic Pump/Motor Division
Greeneville, TN 37745 US

TE Service Parts List Chart

Chart Use Example:
TE0045AS010AAAB Torqmotor™ includes part numbers listed to the right of TE (SERIES), 0045 (DISP.), AS (MOUNTING/PORTING), 01(SHAFT), 0 (ROTATION), and AAAB (OPTION) shown in the left hand column of the chart.

Caution:
The charted component service information is for the Torqmotors listed only. Refer to the original equipment manufacturer of the equipment using the Torqmotor for assembly numbers not listed below.

SERIES	EXPLODED VIEW ITEM #	5	6	8	11	13	12	16	18	19	15
	DESCRIPTION	COMMUTATOR & RING ASSY	MANIFOLD (SEE NOTE)	WEAR PLATE	REAR RADIAL BEARING	THRUST WASHER	THRUST BEARING	BACKUP RING	FRONT RADIAL BEARING	DIRT & WATER SEAL	BACKUP WASHER
TE-	Service Part #	TE018000A1	TE015000	477376	069512	028483	065066	028516	065506	478036	028552

EXPLODED VIEW (Select Item # Bolt Per Option Group)				ROTOR				
ITEM #	1 OR	1A OR	1C	THICKNESS	7A	7B	9	"L" Dim
DISPLACEMENT (in3/rev)	1 - BOLT # (BOLT LENGTH - 6 bolts required)† 1A & 1C BOLT # (BOLT LENGTH - 5 bolts required)			"L" DIM OF ROTOR THICKNESS	ROTOR SET	FREE RUNNING ROTOR SET††	DRIVE LINK	Overall Length
0036-2.2	**021356** (2.625)			**.2750**	TE017003	TE017005	MF013000	**2.975**
0045-2.7	**021311** (2.750)	**021443** (3.440)	**021308** (3.875)	**.3169**	TE027003	TE027005	MF023000	**3.021**
0050-3.0	**021311** (2.750)	**021444** (3.500)	**021308** (3.875)	**.3751**	TE037003	TE037005	MF033000	**3.080**
0065-4.0	**021306** (2.875)	**021358** (3.625)	**021435** (4.000)	**.5001**	TE047003	TE047005	MF043000	**3.206**
0080-5.0	**021382** (3.000)	**021438** (3.750)	**021359** (4.125)	**.6258**	TE057003	TE057005	MF053000	**3.334**
0100-6.0	**021357** (3.125)	**021308** (3.875)	**021445** (4.250)	**.7508**	TE067003	TE067005	MF063000	**3.460**
0130-8.0	**021307** (3.375)	**021359** (4.125)	**021439** (4.500)	**1.0008**	TE087003	TE087005	MF083000	**3.712**
0165-9.9	**021358** (3.625)	**021310** (4.375)	**021384** (4.875)	**1.2508**	TE107003	TE107005	MF103000	**3.969**
0195-11.9	**021308** (3.875)	**021383** (4.625)	**021465** (5.000)	**1.5008**	TE127003	TE127005	MF123000	**4.215**
0230-13.9	**021359** (4.125)	**021384** (4.875)	**021460** (5.250)	**1.7508**	TE147003	TE147005	MF143000	**4.467**
0260-15.9	**021310** (4.375)	**021446** (5.125)	**021467** (5.750)	**2.0008**	TE167003	TE167005	MF163000	**4.718**
0295-17.9	**021383** (4.625)	**021414** (5.375)	**021467** (5.750)	**2.2508**	TE187003	TE187005	MF183000	**4.970**
0330-20.0	**021384** (4.875)	**021459** (5.625)	**021448** (6.000)	**2.5008**	TE207003	TE207005	MF203000	**5.220**
0365-22.6	**021460** (5.250)	**021448** (6.000)	**021469** (6.375)	**2.8406**	TE227003	N/A	MF223000	**5.557**
0390-24.0	**021414** (5.375)	**021449** (6.125)	**021464** (6.531)	**3.0030**	TE247003	N/A	MF243000	**5.716**

† Bolts for TE Series front ported units are the same as rear ported units if you are using the same displacement.

†† Free running rotorset is not available in 0365 or 0390 displacements.

* Not released.

HOUSING GROUP	Mounting Code Porting Code	EXPLODED VIEW ITEM #		2	[1,4]17	17	[1,2]20	SPEED SENSOR	
		DESCRIPTION MOUNTING	PORTING	6 BOLT END COVER	5 BOLT HSG SERVICE PART #	6 BOLT HSG SERVICE PART #	O-RING (2)	6 BOLT HSG SERVICE PART #	SENSOR
FRONT PORTING	MS-	Standard (4 Bolt)	7/8" O-Ring	TE016000	MF012014A1	MF012214A1		MF012314A1	455063
	AS-	SAE A (2 Bolt)	7/8" O-Ring	TE016000	MF012001A1	MF012201A1		MF012301A1	455063
	US-	Wheel Mount	7/8" O-Ring	TE016000	MF012002A1	MF012202A1		MF012302A1	455063
	FS-	4 Bolt	7/8" O-Ring	TE016000	MF012003A1	MF012203A1		MF012303A1	455063
	AM-	SAE A (2 Bolt)	Manifold	TE016000	MF012004A1	MF012204A1	032790	MF012304A1	455063
	FM-	4 Bolt	Manifold	TE016000	MF012005A1	MF012205A1	032790		
	MM-	Standard (4 Bolt)	Manifold	TE016000	MF012049A1	MF012249A1	032790		
	AP-	SAE A (2 Bolt)	1/2" NPTF	TE016000	MF012006A1	MF012206A1		MF012306A1	455063
	FP-	4 Bolt	1/2" NPTF	TE016000	MF012007A1	MF012207A1		MF012307A1	455063
	AT-	SAE A (2 Bolt)	1/2" BSPF	TE016000	MF012011A1	MF012211A1			

HOUSING GROUP	Mounting Code Porting Code	EXPLODED VIEW ITEM #		2	[1,4]17	SPEED SENSOR	
		DESCRIPTION MOUNTING	PORTING	5 BOLT END COVER	5 BOLT HSG SERVICE PART #	5 BOLT HSG SERVICE PART #	SENSOR
REAR PORTING	MR-	Standard (4 Bolt)	Rear Port (3/4"-16 SAE O-Ring)	TE016001	MF012021A1		
	UR-	Small Wheel Mount	Rear Port (3/4"-16 SAE O-Ring)	TE016001	MF012009A1	N/A	455063
	FR-	4 Bolt Mount	Rear Port (3/4"-16 SAE O-Ring)	TE016001	MF012010A1		
	AR-	SAE A (2 Bolt)	Rear Port (3/4"-16 SAE O-Ring)	TE016001	MF012008A1	N/A	455063

NOTE: Rear ported TE motors always have 5 bolts at the back end cover.

Parker Hannifin Corporation
Hydraulic Pump/Motor Division
Greeneville, TN 37745 US

TE Service Parts List Chart

COUPLING SHAFT GROUP	EXPLODED VIEW ITEM #	10			SPEED SENSOR 10
	DESCRIPTION	COUPLING SHAFT	WOODRUFF KEY	NUT	COUPLING SHAFT
01-	Long 6B Snapwire Groove	MF019007			MF019307
09-	1” Ø, 0.38 “Pinhole, 0.55” from end	MF019000			
10-	1” Short Woodruff Key 1/4” Tap	MF019006	038015 (1/4x1)		MF019306
11-	1” Short 6B Spline, 1/4” Snapwire Groove	MF019003			MF019303
12-	1” Tapered (Short)	MF019004	038015 (1/4x1)	025136	MF019304
13-	1” Long Woodruff Snapwire Groove	MF019005	038015 (1/4x1)		MF019305
14-	1” Ø, Double Pinhole	MF019001			
15-	1” Ø, 0.32 “Pinhole 0.4” from end	MF019002			
21-	“-10 Code” plus Corrosion Resistant	MF019008			MF019308
22-	25 mm Straight Shaft with 7 mm Keyway	MF019009	039041		
25-	1” Tapered SAE	MF019011	038015 (1/4x1)	025136	MF019311
26-	25 mm Straight with 8 mm Keyway	MF019012	039047 (8mmx7mm)		MF019312
28-	13 Tooth Spline	MF019014			MF019314
33-	1” Tapered, 3/16 Key, 3/4-16 Thd	MF019016	038014 (3/16x3/4)	025156 Slotted Nut	
69-	25mm Straight with 8mm (stainless steel)	MF019412			
70-	1” dia short, woodruff key, 1/4 tap (stainless steel)	MF019406			
75-	1” dia long, woodruff key, 1/4 tap (stainless steel)	MF019446			

OPTION GROUP	EXPLODED VIEW ITEM #	[4]1, 1A, 1C	2	2	4	3	14	
	DESCRIPTION	BOLT	5 BOLT END COVER	6 BOLT END COVER	COMMUTATOR SEAL	SEAL RING (5)	INNER SEAL	SENSOR
AAAA	Standard Black Paint	Item #1		TE016000	032435	032821	032378	
AAAB	No Paint	Item #1		TE016000	032435	032821	032378	
AAAC	Corrosion Resistant Paint	Item #1		TE016000	032435	032821	032378	
AAAG	Fluorocarbon Seals	Item #1		TE016000	032435	032822	032809	
AABJ	Free Running Rotor Set	Item #1		TE016000	032435	032821	032378	
BBCK	1740 PSI Internal Bidirectional Relief, No Paint	Item #1C	TE016006A7	N/A				
BBCM	1200 PSI Internal Bidirectional Relief, No Paint	Item #1C	TE016006A31	N/A				
BBCN	2030 PSI Internal Bidirectional Relief, No Paint	Item #1C	TE016006A5	N/A				
BBCP	1450 PSI Internal Bidirectional Relief, No Paint	Item #1C	TE016006A10	N/A				
BBCT	1560 PSI Internal Bidirectional Relief, No Paint	Item #1C	TE016006A2	N/A				
AAJV	Bidirectional Shuttle Valve (3:30), Black Paint	Item #1A	TE016003A1	N/A	032435	032821	032378	
FSAA	Speed Sensor, Black Paint	Item #1		TE016000	032435	032821	032378	455063
FSAB	Speed Sensor, No Paint	Item #1		TE016000	032435	032821	032378	455063
FSAH	Speed Sensor, Castle Nut, No Paint	Item #1		TE016000	032435	032821	032378	455063
FSAJ	Speed Sensor, Castle Nut, Black Paint	Item #1		TE016000	032435	032821	032378	455063

[1] Service housing assembly ITEM #17 with part number suffix-A1 includes ITEM #11, #13, #12 and #18.

[2] Select the required bolt number in designated “DISPLACEMENT GROUP” under bolt ITEM #1, 1A, 1B or 1C shown in designated “OPTION GROUP”

[3] Castle Nut #025156 is required if the designated “OPTION GROUP” is AAAF, AAAN, or AAAU.

[4] Order (2) #032790 ITEM #17A for service housing assembly where manifold ports are used.

Standard seal kit #SK000090 includes six #032821 seal rings, #032435 commutator seal, #032378 inner seal, #028516 backup, #478036 dirt & water seal, #406018 grease pack, bulletin #050015 and #028552 backup washer.

Special seal kit #SK000091 for units that use fire retardant fluids include six #032822 seal rings, #032435 commutator seal, #032809 inner seal, #028516 back up ring, #478036 dirt & water seal, #028552 backup washer, #406018 grease pack and bulletin #050015.

For reverse timed manifold, use TE015001.

High Temp commutator seal 032861.

Commutator set for rear ported unit TE018001A1

*** TD Series motors were (5) five bolt end cover with (5) five bolt housing. The newly released TE Series motors are (6) six bolt end cover with (6) bolt housing.**

High Temp commutator seal kit #SK000100 includes six #032821 seal rings, #032861 commutator seal, #032378 inner seal, #028516 back up washer, #478036 dirt & water seal, #406018 grease pack, #bulletin 050015 and #028552 steel backup washer.

Parker Hannifin Corporation
Hydraulic Pump/Motor Division
Greeneville, TN 37745 US

TJ Service Parts List Chart

Chart Use Example:
TJ0045US080AAAB Torqmotor™ includes part numbers listed to the right of TJ (SERIES), 0045 (DISP.), US (MOUNTING/ PORTING), 08(SHAFT), 0 (ROTATION), and AAAB (OPTION) shown in the left hand column of the chart.

Caution:
The charted component service information is for the Torqmotors listed only. Refer to the original equipment manufacturer of the equipment using the Torqmotor for assembly numbers not listed below.

SERIES	EXPLODED VIEW ITEM #	[1]5	6	8	[1]11	[1]13	[1]12	16	[1]18	19	15
	DESCRIPTION	COMMUTATOR ASSEMBLY	MANIFOLD (SEE NOTE)	WEAR PLATE	REAR RADIAL BEARING	THRUST WASHER(2)	THRUST BEARING	BACKUP RING	FRONT RADIAL BEARING	DIRT & WATER SEAL	BACKUP WASHER
TJ-	Service Part #	TE018000A1	TE015000	477376	069513	028348	069030	028515	068027	478035	029118

EXPLODED VIEW (Select Item # Bolt Per Option Group) ITEM #	1 OR	1A OR	1C	ROTOR THICKNESS	7A	7B	9	"L" Dim
DISPLACEMENT (in3/rev)	BOLT # (BOLT LENGTH - 6 bolts required) †			"L" DIM OF ROTOR THICKNESS	ROTOR SET	FREE RUNNING ROTOR SET††	DRIVE LINK	Overall Length
0036-2.2	**021356** (2.625)			**.2750**	TE017003	TE017005	MF013000	**2.975**
0045-2.7	**021311** (2.750)	**021443** (3.440)	**021308** (3.875)	**.3169**	TE027003	TE027005	MF023000	**3.021**
0050-3.0	**021311** (2.750)	**021444** (3.500)	**021308** (3.875)	**.3751**	TE037003	TE037005	MF033000	**3.080**
0065-4.0	**021306** (2.875)	**021358** (3.625)	**021435** (4.000)	**.5001**	TE047003	TE047005	MF043000	**3.206**
0080-5.0	**021382** (3.000)	**021438** (3.750)	**021359** (4.125)	**.6258**	TE057003	TE057005	MF053000	**3.334**
0100-6.0	**021357** (3.125)	**021308** (3.875)	**021445** (4.250)	**.7508**	TE067003	TE067005	MF063000	**3.460**
0130-8.0	**021307** (3.375)	**021359** (4.125)	**021439** (4.500)	**1.0008**	TE087003	TE087005	MF083000	**3.712**
0165-9.9	**021358** (3.625)	**021310** (4.375)	*	**1.2508**	TE107003	TE107005	MF103000	**3.969**
0195-11.9	**021308** (3.875)	**021383** (4.625)	**021465** (5.000)	**1.5008**	TE127003	TE127005	MF123000	**4.215**
0230-13.9	**021359** (4.125)	**021384** (4.875)	**021460** (5.250)	**1.7508**	TE147003	TE147005	MF143000	**4.467**
0260-15.9	**021310** (4.375)	**021446** (5.125)	**021467** (5.750)	**2.0008**	TE167003	TE167005	MF163000	**4.718**
0295-17.9	**021383** (4.625)	**021414** (5.375)	*	**2.2508**	TE187003	TE187005	MF183000	**4.970**
0330-20.0	**021384** (4.875)	**021459** (5.625)	**021448** (6.000)	**2.5008**	TE207003	TE207005	MF203000	**5.220**
0365-22.6	**021460** (5.250)	**021448** (6.000)	*	**2.8406**	TE227003	N/A	MF223000	**5.557**
0390-24.0	**021414** (5.375)	**021449** (6.125)	**021464** (6.531)	**3.0030**	TE247003	N/A	MF243000	**5.716**

† Bolts for TE Series front ported units are the same as rear ported units if you are using the same displacement.

†† Free running rotorset is not available in 0365 or 0390 displacements.

* Not released.

[1] Service housing assembly ITEM #17 with part number suffix-A1 includes ITEM #11, #13, #12 and #18.

[2] Order (2) #032790 ITEM #17A for service housing assembly where manifold ports are used.

[3] Nut #025113 is required if the designated "OPTION GROUP" is AAAF, AAAN, or AAAU.

Standard seal kit #SK000146 includes five #032821 seal rings, #032435 commutator seal, #032817 shaft seal, #028515, backup ring #050016 and #029118 backup washer, #478035 dirt & water, #406018 grease pack, bulletin #050016.

Special seal kit #SK000148 for units that use fire retardant fluids or higher temperature oil includes five #032822 seal rings, #032435 commutator seal, #032818 shaft seal, #028515 backup ring, #478035 dirt & water seal, #406018 grease pack, #029118 backup washer, #050016 bulletin.

High Temp commutator seal 032861.

For reverse timed manifold, use TE015001.

Parker Hannifin Corporation
Hydraulic Pump/Motor Division
Greeneville, TN 37745 US

TJ Service Parts List Chart

HOUSING GROUP				
	Mounting Code / Porting Code	**EXPLODED VIEW ITEM #**		[1]18
		DESCRIPTION MOUNTING	**PORTING**	**SERVICE HOUSING ASSY**
	US-	Wheel Mount (4 Bolt)	7/8”-14 SAE O-Ring	MP012002A1

COUPLING SHAFT GROUP				
08-	1 1/4” Tapered	MP019000	038016 (5/16x1)	025126

OPTION GROUP						
	EXPLODED VIEW ITEM #	[2]1, 1A, 1C	2	4	3	14
	DESCRIPTION	**BOLT**	**END COVER**	**COMMUTATOR SEAL**	**SEAL RING (5)**	**INNER SEAL**
AAAB	No Paint	ITEM #1	TE016000	032435	032821	032817
AAAC	Corrosion Resistant Paint	ITEM #1	TE016000	032435	032821	032817
AAAG	Fluorocarbon Seals	ITEM #1	TE016000	032435	032822	032818
AABJ	Free Running Rotor Set	ITEM #1	TE016000	032435	032821	032817
BBCK	1740 PSI Internal Bidirectional Relief, No Paint	ITEM #1C	TE016006A7	032435	032821	032817
BBCM	1200 PSI Internal Bidirectional Relief, No Paint	ITEM #1C	TE016006A31	032435	032821	032817
BBCN	2030 PSI Internal Bidirectional Relief, No Paint	ITEM #1C	TE016006A5	032435	032821	032817
BBCP	1450 PSI Internal Bidirectional Relief, No Paint	ITEM #1C	TE016006A10	032435	032821	032817
BBCT	1560 PSI Internal Bidirectional Relief, No Paint	ITEM #1C	TE016006A2	032435	032821	032817
AAJV	Bidirectional Shuttle Valve (3:30), Black Paint	ITEM #1A	TE016004A1	032435	032821	032817

[1] Service housing assembly ITEM #17 with part number suffix-A1 includes ITEM #11, #13, #12 and #18.

[2] Order (2) #032790 ITEM #18A for service housing assembly where manifold ports are used.

[3] Nut #025113 is required if the designated “OPTION GROUP” is AAAF, AAAN, or AAAU.

Standard seal kit #SK000146 includes five #032821 seal rings, #032435 commutator seal, #032817 shaft seal, #028515, backup ring #050016 and #029118 backup washer, #478035 dirt & water, #406018 grease pack, bulletin #050016.

Special seal kit #SK000148 for units that use fire retardant fluids or higher temperature oil includes five #032822 seal rings, #032435 commutator seal, #032818 shaft seal, #028515 backup ring, #478035 dirt & water seal, #406018 grease pack, #029118 backup washer, #050016 bulletin.

High Temp commutator seal 032861.

For reverse timed manifold, use TE015001.

Parker Hannifin Corporation
Hydraulic Pump/Motor Division
Greeneville, TN 37745 US

Preparation Before Disassembly

- Before you disassemble the Torqmotor™ unit or any of its components read this entire manual. It provides important information on parts and procedures you will need to know to service the Torqmotor™.

- Determine the type of end construction from the alternate views shown on the exploded view.

- The TC, TS, TB & TE Torqmotors™ will have a 3.66 inch (92.9 mm) main body outside diameter and five or six 5/16-24 UNF 2A cover bolts. The TJ Torqmotors™ will have a 3.66 inch (92.9 mm) main body outside diameter and six 5/16-24 UNF 2A cover bolts.

- Refer to “Tools and Materials Required for Services” section for tools and other items required to service the Torqmotor™ and have them available.

- Thoroughly clean off all outside dirt, especially from around fittings and hose connections, before disconnecting and removing the Torqmotor™. Remove rust or corrosion from coupling shaft.

- Remove coupling shaft connections and hose fittings and immediately plug port holes and fluid lines.

- Remove the Torqmotor™ from system, drain it of fluid and take it to a clean work surface.

- Clean and dry the Torqmotor™ before you start to disassemble the unit.

- As you disassemble the Torqmotor™ clean all parts, except seals, in clean petroleum-based solvent, and blow them dry.

WARNING: petroleum-base solvents are flammable. Be extremely careful when using any solvent. Even a small explosion or fire could cause injury or death.

WARNING: WEAR EYE PROTECTION AND BE SURE TO COMPLY WITH OSHA OR OTHER MAXIMUM AIR PRESSURE REQUIREMENTS.

CAUTION: Never steam or high pressure wash hydraulic components. Do not force or abuse closely fitted parts.

- Keep parts separate to avoid nicks and burrs.

- Discard all seals and seal rings as they are removed from the Torqmotor™. Replace all seals, seal rings and any damaged or worn parts with genuine Parker or OEM approved service parts.

Reference Exploded Assembly View

Place Torqmotor in a vise

1. Place the Torqmotor™ in a soft jawed vise, with coupling shaft (10) pointed down and the vise jaws clamping firmly on the sides of the housing (17) mounting flange or port bosses. SEE FIGURE 3. Remove manifold port O-Rings (20) if applicable.

WARNING

WARNING: IF THE TORQMOTOR™ IS NOT FIRMLY HELD IN THE VISE, IT COULD BE DISLODGED DURING THE SERVICE PROCEDURES, CAUSING INJURY.

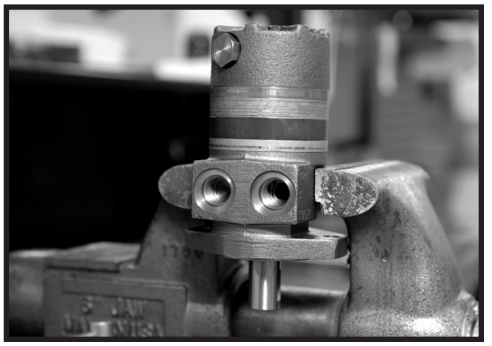

Figure 3

Scribe alignment mark & loosen valve plugs

2. Scribe an alignment mark down and across the Torqmotor™ components from end cover (2) to housing (17) to facilitate reassembly orientation where required. Loosen two shuttle or relief valve plugs (21, 23) for disassembly later if included in end cover. 3/16 or 3/8 inch Allen wrench or 1 inch hex socket required. SEE FIGURES 4 & 5.

Figure 4

Figure 5

Remove special bolts & inspect bolts

3. Remove the seven special ring head bolts (1, 1A, 1B or 1C) using an appropriate 1/2 inch size socket. Inspect bolts for damaged threads, or sealing rings, under the bolt head. Replace damaged bolts. SEE FIGURES 6-9.

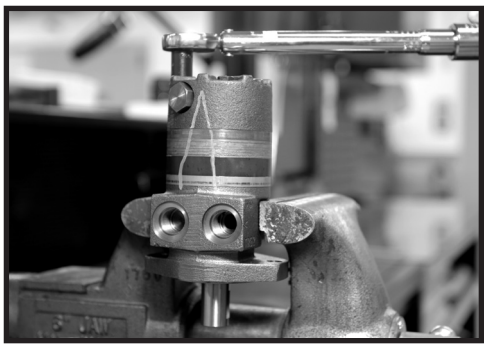

Figure 6

Figure 7

Figure 8

Figure 9

Disassembly and Inspection

Remove end cover & inspect bolts

4. Remove end cover assembly (2). SEE FIGURE 10. After July 2012, motors no longer have section seal ring located in the end cover (2).

NOTE

NOTE: Refer to the appropriate "alternate cover construction" on the exploded view to determine the end cover construction being serviced.

Figure 10

Remove plugs and valves

5. If the end cover (2) is equipped with shuttle valve or relief valve (22,24) components, remove the two previously loosened plugs (21,23). SEE FIGURE 11.

CAUTION

CAUTION: Be ready to catch the shuttle valve or relief valve components that will fall out of the end cover valve cavity when the plugs are removed.

NOTE

NOTE: O-ring (20) is not included in seal kits but serviced separately if required.

NOTE

NOTE: The orifice plug in the end cover (2) must not be removed as they are serviced as an integral part of the end cover.

Figure 11

Wash & inspect end cover

6. Thoroughly wash end cover (2) in proper solvent and blow dry. Be sure the end cover valve apertures, including the internal orifice plug, are free of contamination. Inspect end cover for cracks and the bolt head recesses for good bolt head sealing surfaces. Replace end cover as necessary.

NOTE

NOTE: A polished pattern (not scratches) on the cover from rotation of the commutator (5) is normal. Discoloration would indicate excess fluid temperature, thermal shock, or excess speed and require system investigation for cause and close inspection of end cover, commutator, manifold, and rotor set.

Figure 12

Remove & inspect commutator ring

7. Remove commutator ring seal (3) and discard. SEE FIGURE 12. Remove commutator ring (5). Inspect commutator ring for cracks, or burrs. SEE FIGURE 13.

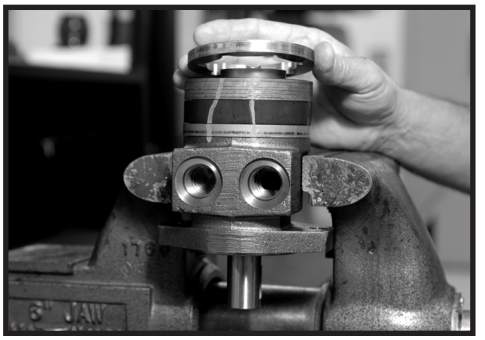

Figure 13

Remove & inspect commutator

8. Remove commutator (5) and seal ring (4) Remove seal ring from commutator, using an air hose to blow air into ring groove until seal ring is lifted out and discard seal ring. Inspect commutator for cracks or burrs, wear, scoring, spalling or brinelling. If any of these conditions exist, replace commutator and commutator ring as a matched set. SEE FIGURE 14 & 15.

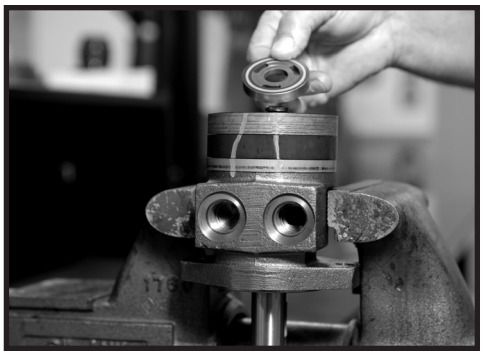

Figure 14

Figure 15

Remove manifold

9. Remove manifold seal ring (3) and discard. SEE FIGURE 16. Remove the manifold (6) and inspect for cracks surface scoring, brinelling or spalling. Replace manifold if any of these conditions exist. SEE FIGURE 17. A polished pattern on the ground surface from commutator or rotor rotation is normal.

NOTE

NOTE: The manifold is constructed of plates bonded together to form an integral component not subject to further disassembly for service. Compare configuration of both sides of the manifold to ensure that same surface is reassembled against the rotor set.

Figure 16

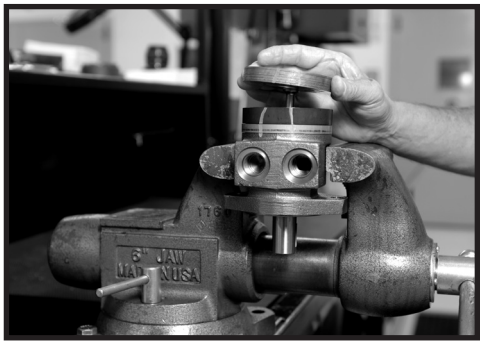

Figure 17

NOTE

NOTE: A polished pattern on the wear plate from rotor rotation is normal. SEE FIGURE 18

Figure 18

Remove & inspect rotor set & wearplate

10. Remove rotor set (7) and wearplate (8), together to retain the rotor set in its assembled form, maintaining the same rotor vane to stator contact surfaces. SEE FIGURE 19. The drive link (9) may come away from the coupling shaft (10) with the rotor set, and wearplate. You may have to shift the rotor set on the wearplate to work the drive link out of the rotor (7) and wearplate (8). SEE FIGURE 20. Inspect the rotor set in its assembled form for nicks, scoring, or spalling on any surface and for broken or worn splines. If the rotor set component requires replacement, the complete rotor set must be replaced as it is a matched set. Inspect the wearplate for cracks, brinelling, or scoring. Discard seal ring (3) that is between the rotor set and wearplate.

Figure 19

NOTE

NOTE: The rotor set (7) components may become disassembled during service procedures. Marking the surface of the rotor and stator that is facing UP, with etching ink or grease pencil before removal from Torqmotor™ will ensure correct reassembly of rotor into stator and rotor set into Torqmotor™. Marking all rotor components and mating spline components for exact repositioning at assembly will ensure maximum wear life and performance of rotor set and Torqmotor™.

Figure 20

Check rotor, vane clearance

11. Place rotor set (7) and wear plate (8) on a flat surface and center rotor in stator such that two rotor lobes (180 degrees apart) and a roller vane centerline are on the same stator centerline. Check the rotor lobe to roller vane clearance with a feeler gage at this common centerline. If there is more than .005 inches (0.13 mm) of clearance, replace rotor set. SEE FIGURE 21 & 22.

NOTE

NOTE: If rotor set (7) has two stator halves and two sets of seven vanes, check the rotor lobe to roller vane clearance at both ends of rotor.

Figure 21

12. If wear plate is still in place then remove the wear plate seal ring (3) and discard.

Figure 22

Remove & inspect drive link

13. Remove drive link (9) from coupling shaft (10) if it was not removed with rotor set and wear plate. Inspect drive link for cracks and worn or damaged splines. No perceptible lash (play) should be noted between mating spline parts. SEE FIGURE 23.

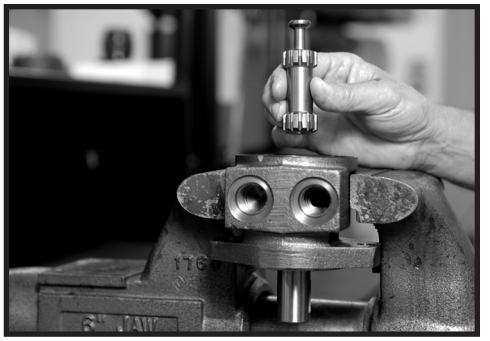

Figure 23

Remove seal ring from housing

14. Remove and discard seal ring (3) from housing (17). SEE FIGURE 24.

Figure 24

Check coupling shaft for rust or corrosion

15. Check exposed portion of coupling shaft (10) to be sure you have removed all signs of rust and corrosion which might prevent its withdrawal through the seal and bearing. Crocus cloth or fine emery paper may be used. SEE FIGURE 25. Remove any key (26) or nut (27a,27b).

Figure 25

Remove & inspect coupling shaft

16. Remove coupling shaft (10), by pushing on the output end of shaft. SEE FIGURE 26 & 27. Inspect coupling shaft bearing and seal surfaces for spalling, nicks, grooves, severe wear or corrosion and discoloration. Inspect for damaged or worn internal and external splines or keyway. SEE FIGURE 28. Replace coupling shaft if any of these conditions exist.

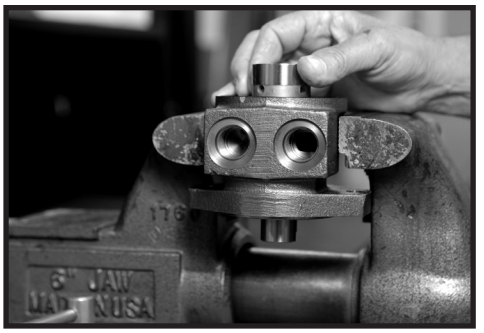

Figure 26

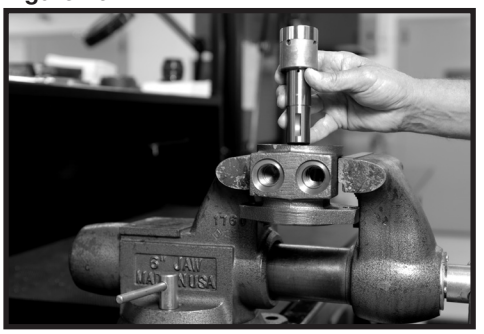

Figure 27

NOTE

NOTE: Minor shaft wear in seal area is permissible. If wear exceeds .020 inches (0.51 mm) diametrically, replace coupling shaft.

NOTE

NOTE: A slight "polish" is permissible in the shaft bearing areas. Anything more would require coupling shaft replacement.

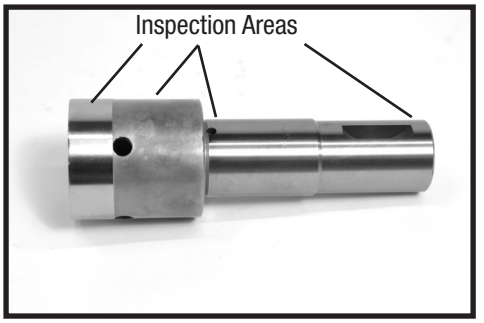

Figure 28

Inspect housing assembly

17. Inspect housing (17) assembly for cracks, the machined surfaces for nicks, burrs, brinelling or corrosion. Remove burrs that can be removed without changing dimensional characteristics. Inspect tapped holes for thread damage. SEE FIGURE 29. If the housing is defective in these areas, discard the housing assembly.

Figure 29

Remove & inspect thrust washer & thrust bearing

18. Remove thrust bearing (12) and thrust washer (13). Inspect for wear, brinelling, corrosion and a full complement of retained rollers. SEE FIGURE 30.

    The TJ series has a thrust bearing (12) sandwiched between two thrust washers (13) that cannot be removed from the housing (17) unless bearing (14) is removed for replacement.

Figure 30

Remove shaft seal, backup ring and backup washer

19. Remove shaft seal (14), backup washer (15) and back up ring (16) from housing (17). Discard both. SEE FIGURE 31.

    In the TJ series, the shaft seal (14), backup washer (15) and backup ring (16) must be removed by working them around unseated thrust washers (13) and thrust bearing (12) and out of the housing. Discard seal and washers. SEE FIGURES 31A, 31B & 31C.

Figure 31

Figure 31A

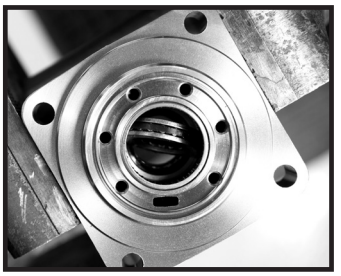
Figure 31B

Figure 31C

Inspect housing bearing/bushing

20. If the housing (17) assembly has passed inspection to this point, inspect the housing bearings/bushings (11) and (18) and if they are captured in the housing cavity the thrust washer (13) and thrust bearing (12). The bearing rollers must be firmly retained in the bearing cages, but must rotate and orbit freely. All rollers and thrust washers must be free of brinelling and corrosion. SEE FIGURE 32. A bearing, bushing, or thrust washer that does not pass inspection must be replaced. If the housing has passed this inspection the disassembly of the Torqmotor™ is completed.

Figure 32

Remove bearings or bushings & thrust washers

21. If the bearings, bushing or thrust washers must be replaced use a suitable size bearing puller to remove bearing/bushings (18) and (11) from housing (17) without damaging the housing. Remove thrust washer (13) and thrust bearing (12) if they were previously retained in the housing by bearing (11). SEE FIGURES 33.

Figure 33

Remove dirt & water seal

22. Remove housing (17) from vise, invert it and remove and discard dirt & water seal (19). A blind hole bearing or seal puller is required. SEE FIGURE 34.

Figure 34

THE DISASSEMBLY OF TORQMOTOR™ IS COMPLETED.

Torqmotor™ Assembly

- Replace all seals and seal rings with new ones each time you reassemble the Torqmotor™ unit. Lubricate all seals and seal rings with SAE 10W40 oil or clean grease before assembly.
- **NOTE: Individual seals and seal rings as well as a complete seal kit are available. SEE FIGURE 35. The parts should be available through most OEM parts distributors or Parker approved Torqmotor™ distributors. (Contact your local dealer for availability).**
- **NOTE: Unless otherwise indicated, do not oil or grease parts before assembly.**
- Wash all parts in clean petroleum-based solvents before assembly. Blow them dry with compressed air. Remove any paint chips from mating surfaces of the end cover, commutator set, manifold rotor set, wear plate and housing and from port and sealing areas.

WARNING **WARNING: SINCE THEY ARE FLAMMABLE, BE EXTREMELY CAREFUL WHEN USING ANY SOLVENT. EVEN A SMALL EXPLOSION OR FIRE COULD CAUSE INJURY OR DEATH.**

WARNING **WARNING: WEAR EYE PROTECTION AND BE SURE TO COMPLY WITH OSHA OR OTHER MAXIMUM AIR PRESSURE REQUIREMENTS.**

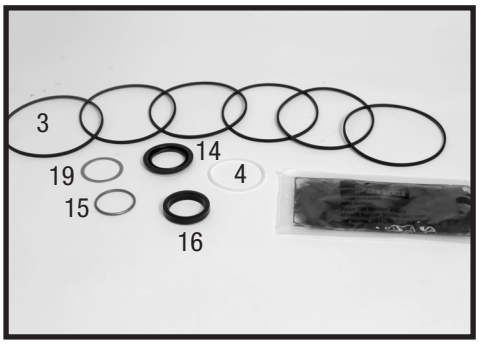

Figure 35 seal kit

Press in outer bearing/bushing

1. If the housing (17) bearing components were removed for replacement, thoroughly coat and pack a **new** outer bearing/bushing (18) with clean corrosion resistant grease recommended in the material section. Press the new bearing/ bushing into the counterbore at the mounting flange end of the housing, using the appropriate sized bearing mandrel such as described in Figure 1 or Figure 2 which will control the bearing/ bushing depth.

   TC, TS, TB and TE Torqmotor™ housings require the use of bearing mandrel shown in Figure 1 to press bearing/ bushing (18) into the housing to a required depth of .151/.161 inches (3.84/4.09 mm) from the end of the bearing counterbore. SEE FIGURE 36A.

   TJ Torqmotor™ housings require the use of the bearing mandrel shown in Figure 2 to press bearing (18) into the housing to a required depth of .290/.310 inches (7.37/7,87 mm) from the outside end of the bearing counterbore. SEE FIGURE 36B.

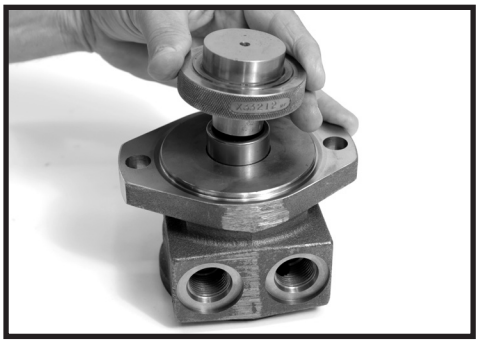
Figure 36A

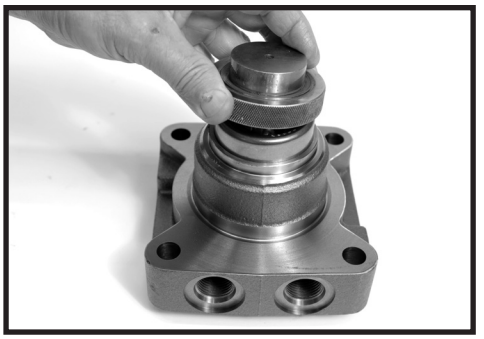
Figure 36B

Parker Hannifin Corporation
Hydraulic Pump/Motor Division
Greeneville, TN 37745 US

Torqmotor™ Assembly

NOTE **NOTE: Bearing mandrel must be pressed against the lettered end of bearing shell. Take care that the housing bore is square with the press base and the bearing/ bushing is not cocked when pressing a bearing/bushing into the housing.**

CAUTION **CAUTION: If the bearing mandrel specified in the "Tools and Materials Required for Servicing" section is not available and alternate methods are used to press in bearing/bushing (11) and (18) the bearing/bushing depths specified must be achieved to insure adequate bearing support and correct relationship to adjacent components when assembled.**

CAUTION **CAUTION: Because the bearing/bushings (11) and (18) have a press fit into the housing they must be discarded when removed. They must not be reused.**

Press in dirt & water seal

2. Press a **new** dirt and water seal (19) into the housing (17) outer bearing counterbore. The dirt and water seal (19) must be pressed in until its' flange is flush against the housing. SEE FIGURE 37A.

   The TJ series dirt and water seal (19) must be pressed in the lip facing out and until the seal is flush to .020 inches (.51 mm) below the end housing. SEE FIGURE 37B.

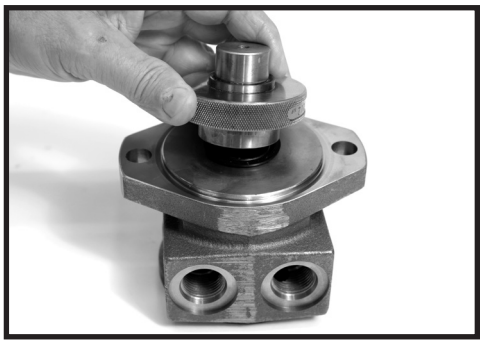

Figure 37A

Press in inner bearing/bushing

3. The inner housing bearing/bushing (11) can now be pressed into its counterbore in housing (17) flush to .03 inch (.76 mm) below the housing wear plate contact face. Use the opposite end of the bearing mandrel that was used to press in the outer bearing/bushing (18). Reference Figure 1, "Tools and Materials Required for Servicing" section. SEE FIGURE 38.

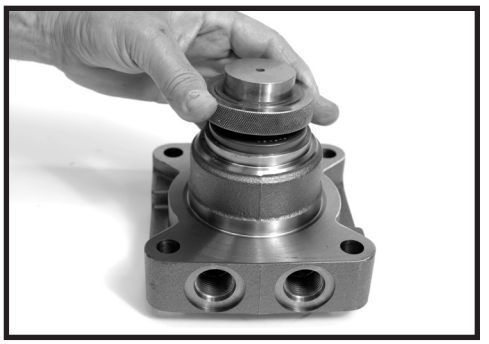

Figure 37B

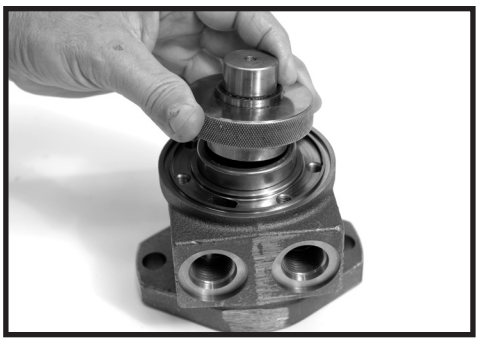

Figure 38

Parker Hannifin Corporation
Hydraulic Pump/Motor Division
Greeneville, TN 37745 US

Place housing assembly into vise

4. Place housing (17) assembly into a soft jawed vise with the coupling shaft bore down, clamping against the mounting flange. SEE FIGURE 39.

Figure 39

Assemble backup washer & seal

5. TC, TS, TB & TE Torqmotors™ assemble a **new** backup ring (16), **new** backup washer (15) and **new** seal (14) with the seal lip facing toward the inside of Torqmotor™ (see Figure 57B), into their respective counterbores in housing (17) if they were not assembled in procedure 1.

Figure 40

The TJ Torqmotor™ housing (17) requires that you assemble a **new** backup washer (15) & backup ring (16), **new** seal (14), with the lip facing to the inside of Torqmotor (see figure 57A), **new** thrust washer (13), **new** thrust bearing (12) and a **new** second thrust washer (13) in that order before pressing in the inner housing bearing (11).
SEE FIGURES 40A & 40B.

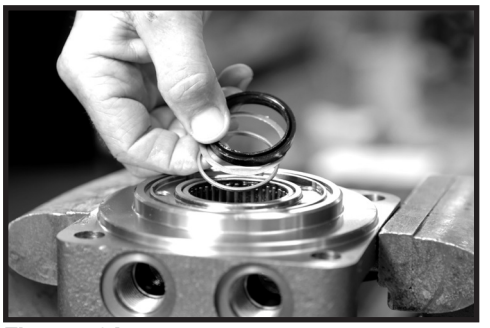

Figure 40A

When these components are in place, press **new** bearing (11) into the housing (17) to a depth of .03 inches (.76 mm) max for TJ below the housing wear plate contact face. Use the opposite end of the bearing mandrel used to press in outer bearing (18). Reference Figure 2, in the "Tools and Materials Required for Servicing" section.
SEE FIGURE 40C.

Figure 40B

Figure 40C

For a TJ Torqmotor™ that did not require replacing the bearing, assemble a **new** backup washer (15) & backup ring (16) and a **new** seal (14), with the lip facing to the inside of Torqmotor (see figure 57A), by working them around unseated thrust washers (13) and thrust bearing (12).
SEE FIGURE 40D.

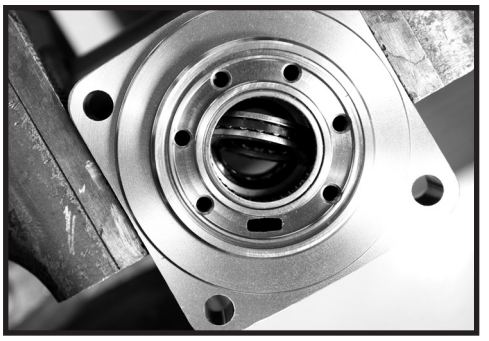

Figure 40D

Assemble thrust washer & bearing

6. Assemble thrust washer (13) then thrust bearing (12) that was removed from the Series TC, TB, TS or TE Torqmotor™.
SEE FIGURE 41.

NOTE

NOTE: TC, TS, TB and TE Torqmotors™ require one thrust washer (13) with thrust bearing (12). The coupling shaft will be seated directly against the thrust bearing.

Figure 41

Install coupling shaft

7. Be sure that a generous amount of clean corrosion resistant grease has been applied to the lower (outer) housing bearing/bushing (18). Install the coupling shaft (10) into housing (17), seating it against the thrust bearing (12) in TC, TS, TB and TE Series housings.
SEE FIGURE 42.

CAUTION

CAUTION: The outer bearing (18) is not lubricated by the system's hydraulic fluid. Be sure it is thoroughly packed with the recommended grease, Parker Gear grease specification #045236, E/M Lubricant #K-70M.

NOTE

NOTE: Mobil Mobilith SHC ® 460
NOTE: A 102 Tube (P/N 406010) is included in each seal kit.

NOTE

NOTE: The coupling shaft (10) will be flush or just below the housing wear surface on the TC, TS, TB, TE & TJ Torqmotors™ when properly seated. The coupling shaft must rotate smoothly on the thrust bearing package.

Figure 42

Insert seal ring

8. Apply a small amount of clean grease to a **new** seal ring (3) and insert it into the housing (17) seal ring groove. SEE FIGURE 43.

Figure 43

Install drive link

9. Install drive link (9) the long splined end down into the coupling shaft (10) and engage the drive link splines into mesh with the coupling shaft splines. SEE FIGURE 44.

NOTE

NOTE: Use any alignment marks put on the coupling shaft and drive link before disassembly to assemble the drive link splines in their original position in the mating coupling shaft splines.

Figure 44

NOTE

NOTE: One or two alignment studs screwed finger tight into housing (17) bolt holes, approximately 180 degrees apart, will facilitate the assembly and alignment of components as required in the following procedures. The studs can be made by cutting off the heads of either 3/8-24 UNF 2A or 5/16-24 UNF 2A bolts as required that are over .5 inch (12.7 mm) longer than the bolts (1, 1A, 1B or 1C) used in the Torqmotor™.

Assemble wear plate

10. Assemble wear plate (8) over the drive link (9) and alignment studs onto the housing (17). SEE FIGURE 45.

    Apply a small amount of clean grease to a new seal ring and insert into the groove of the wear plate.

Figure 45

Install the assembled rotor set

11. Install the assembled rotor set (7) onto wear plate (8) with rotor counterbore and seal ring side down and the splines into mesh with the drive link splines.

    Apply clean grease to a **new** seal ring (3) and assemble it in the seal ring groove in the rotor set.

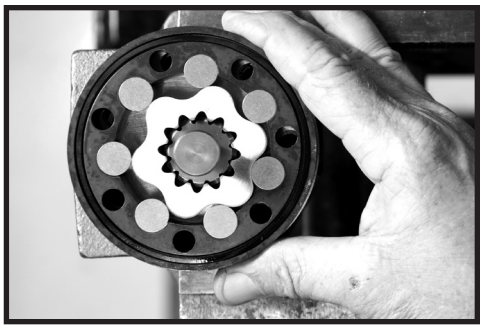

Figure 46

NOTE

NOTE: It may be necessary to turn one alignment stud out of the housing (17) temporarily to assemble rotor set (7) or manifold (6) over the drive link.

NOTE

NOTE: If necessary, go to the appropriate, "Rotor Set Component Assembly Procedure."

NOTE

NOTE: The rotor set rotor counterbore side must be down against wear plate for drive link clearance and to maintain the original rotor-drive link spline contact. A rotor set without a counterbore and that was not etched before disassembly can be reinstalled using the drive link spline pattern on the rotor splines if apparent, to determine which side was down.

Assemble manifold

12. Assemble the manifold (6) over the alignment studs and drive link (9) and onto the rotor set. Be sure the correct manifold surface is against the rotor set.

    Apply grease to a **new** seal ring (3) and insert it in the seal ring groove exposed on the manifold. SEE FIGURE 47.

    NOTE: The manifold (6) is made up of several plates bonded together permanently to form an integral component. The manifold surface that must contact the rotor set has it's series of irregular shaped cavities on the largest circumference or circle around the inside diameter. The polished impression left on the manifold by the rotor set is another indication of which surface must contact the rotor set.

Figure 47

Assemble commutator ring

13. Assemble the commutator ring (5) over alignment studs onto the manifold. SEE FIGURE 48. After June 2012, add seal ring to commutator ring.

Figure 48

Assemble seal & commutator

14. Assemble a **new** commutator seal ring (3) flat side up, into commutator (5) and assemble commutator over the end of drive link (9) onto manifold (6) with seal ring side up. SEE FIGURE 49.

Figure 49

Assemble shuttle valve parts into end cover

15. If shuttle valve components items #23, #24, #25 were removed from the end cover (2) turn a plug (23) with a **new** o-ring (20), loosely into one end of the valve cavity in the end cover. Insert a spring (25) the valve (24) and the second spring (25) into the other end of the valve cavity. Turn the second plug (23) with a **new** o-ring (20) loosely into the end cover valve cavity. 3/16 inch Allen wrench required. SEE FIGURE 50.

Figure 50

Assemble relief valve parts in end cover

16. If relief valve components items #21, #22 were removed from the end cover (2) assemble a **new** o-ring (20) on the two plugs (21). Assemble a two piece relief valve (22) in each of the plugs, with the large end of the conical spring into the plug first and the small nut of the other valve piece in the small end of the conical spring. Turn each of the plug and relief valve assemblies into the end cover loosely to be torqued later. 3/8 inch Allen or 1 inch Hex socket required. SEE FIGURE 51 & 52.

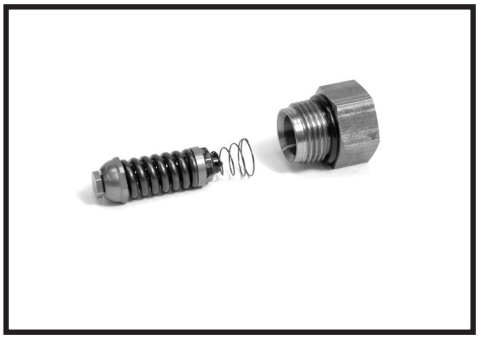

Figure 51

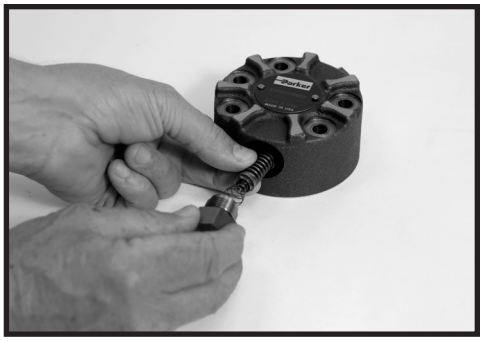

Figure 52

Assemble end cover

17. Assemble end cover over the alignment studs and onto the commutator set. SEE FIGURE 53 & 54. If the end cover has only 5 bolt holes be sure the cover holes are aligned with the 5 threaded holes in housing (17). The correct 5 bolt end cover bolt hole relationship to housing port bosses is shown in FIGURE 53. After June 2012, end cover no longer has o-ring section seal.

Figure 53

NOTE

NOTE: If the end cover has a valve (22, 24) or has five bolt holes, use the line you previously scribed on the cover to radially align the end cover into its original position.

Figure 54

Torqmotor™ Assembly

Assemble cover bolts

18. Assemble the 5 or 6 special bolts (1, 1A, 1B or 1C) and screw in finger tight. Remove and replace the two alignment studs with bolts after the other bolts are in place. Alternately and progressively tighten the bolts to pull the end cover and other components into place with a final torque of 25-30 ft. lbs. (34-41 N m) for the five TC, TS, TB or six TE Series 5/16 24 threaded bolts or six TJ bolts. SEE FIGURE 55.

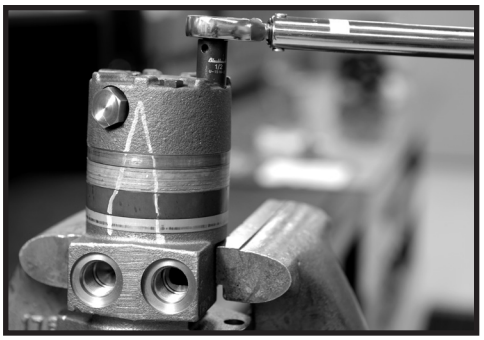

Figure 55

NOTE

NOTE: The special bolts required for use with the relief or shuttle valve (22, 24) end cover assembly (2) are longer than the bolts required with standard and cover assembly. Refer to the individual service parts lists or parts list charts for correct service part number if replacement is required.

Torque the valve plugs

19. Torque the two shuttle valve plug assemblies (23) in end cover assembly to 9-12 ft. lbs. (12-16 N m) if cover is so equipped. SEE FIGURE 56.

    Torque the two relief valve plug assemblies (21) in end cover assembly to 45-55 ft. lbs. (61-75 N m) if cover is so equipped.

Figure 56

Parker Hannifin Corporation
Hydraulic Pump/Motor Division
Greeneville, TN 37745 US

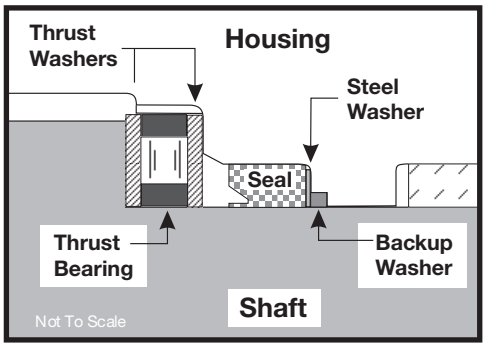

Figure 57A **TJ Series**

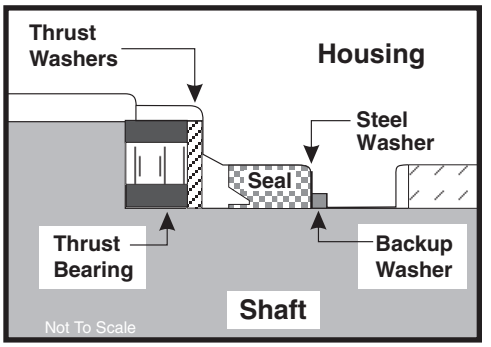

Figure 57B **TC, TS, TB, TE Series**

THE ASSEMBLY OF THE TORQMOTOR™ IS NOW COMPLETE EXCEPT FOR WOODRUFF KEY, NUT, WASHER, BOLT, LOCKWASHER, RETAINER RING or PORT O-RINGS AT INSTALLATION IF APPLICABLE. PROCEED TO FINAL CHECKS SECTION.

Parker Hannifin Corporation
Hydraulic Pump/Motor Division
Greeneville, TN 37745 US

One Piece Stator Construction

A disassembled rotor (7) stator and vanes that cannot be readily assembled by hand can be assembled by the following procedures.

Assemble stator

1. Place stator (7) onto wear plate (8) with seal ring (3) side up, after following Torqmotor™ assembly procedures 1 through 11. Be sure the seal ring is in place. SEE FIGURE 58.

Figure 58

Insert two bolts

2. If assembly alignment studs are not being utilized, align stator bolt holes with wear plate and housing bolt holes and turn two bolts (1, 1A, 1B or 1C) finger tight into bolt holes approximately 180 degrees apart to retain stator and wear plate stationary.

Assemble rotor

3. Assemble the rotor (7), counterbore down if applicable, into stator, and onto wear plate (8) with rotor splines into mesh with drive link (9) splines. SEE FIGURE 59.

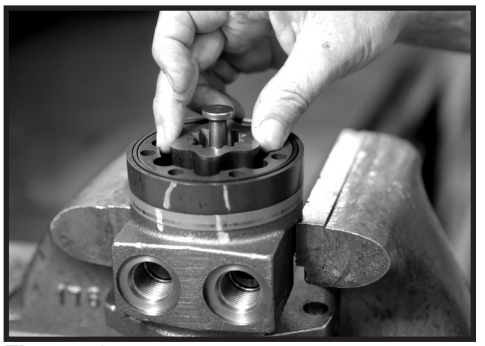

Figure 59

NOTE

NOTE: If the manifold side of the rotor was etched during Torqmotor disassembly, this side should be up. If the rotor is not etched and does not have a counterbore, use the drive link spline contact pattern apparent on the rotor splines to determine the rotor side that must be against the wear plate.

Assemble vanes

4. Assemble six vanes, or as many vanes that will readily assemble into the stator vane pockets. SEE FIGURE 60.

Figure 60

CAUTION

CAUTION: Excessive force used to push the rotor vanes into place could shear off the coating applied to the stator vane pockets.

Assemble full complement of vanes

5. Grasp the output end of coupling shaft (10) with locking pliers or other appropriate turning device and rotate coupling shaft, drive link and rotor to seat the rotor and the assembled vanes into stator, creating the necessary clearance to assemble the seventh or full complement of seven vanes. Assemble the seven vanes using minimum force.

Remove two assembled bolts

6. Remove the two assembled bolts (1, 1A, 1B or 1C) if used to retain stator and wear plate.

   Go to Torqmotor™ assembly procedure #13, to continue Torqmotor™ assembly.

Parker Hannifin Corporation
Hydraulic Pump/Motor Division
Greeneville, TN 37745 US

Two Piece Stator Construction

A disassembled rotor set (7) that cannot be readily assembled by hand and has a two piece stator can be assembled by the following procedures.

Assemble stator halves

1. Place stator half onto wear plate (8) with seal ring (3) side up, after following Torqmotor™ assembly procedures 1 through 11. Be sure the seal ring is in place. SEE FIGURE 61.

Figure 61

Insert two alignment studs

2. Align stator bolt holes with wear plate and housing bolts and turn two alignment studs finger tight into bolt holes approximately 180 degrees apart to retain stator half and wear plate stationary. SEE FIGURE 46.

Assemble rotor

3. Assemble rotor, counterbore down into stator half, and onto wear plate (8) with rotor splines into mesh with drive link (9) splines.

NOTE

NOTE: Use any marking you applied to rotor set components to reassemble the components in their original relationship to ensure ultimate wear life and performance.

Figure 62

Assemble vanes

4. Assemble six vanes, or as many vanes that will readily assemble into the stator vane pockets. SEE FIGURE 62.

CAUTION

CAUTION: Excessive force used to push the rotor vanes into place could shear off the coating applied to the stator vane pockets.

Figure 63

Assemble full complement of vanes

5. Grasp the output end of coupling shaft (10) with locking pliers or other appropriate turning device and rotate coupling shaft, drive link and rotor to seat the rotor and the assembled vanes into stator half, creating the necessary clearance to assemble the seventh or full complement of seven vanes. Assemble the seven vanes using minimum force. SEE FIGURE 60.

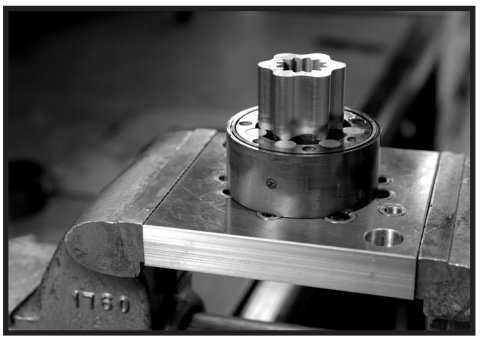

Figure 64

Assemble seal ring in stator half

6. Place second stator half on a flat surface with seal ring groove up. Apply a small amount of grease to a **new** seal ring (3) and assemble it into stator half ring groove.

Parker Hannifin Corporation
Hydraulic Pump/Motor Division
Greeneville, TN 37745 US

Assemble second stator half

7. Assemble the second stator half over the two alignment studs and rotor with seal ring side up onto the first stator half aligning any timing marks applied for this purpose. SEE FIGURE 65.

Figure 65

CAUTION

CAUTION: If the stator half is a different height (thickness) than stator half the stator vanes or of the same length (height) as the stator half must be reassembled in their respective stator half for the rotor set to function properly.

Assemble vanes

8. Assemble six vanes, or as many vanes that will readily assemble into the stator vane pockets. SEE FIGURE 66.

Figure 66

Assemble full complement of vanes

9. Grasp the output end of coupling shaft (10) with locking pliers or other appropriate turning device and rotate coupling shaft, drive link and rotor to seat the rotor and the assembled vanes into stator, creating the necessary clearance to assemble the seventh or full complement of seven vanes. Assemble the seven vanes using minimum force. SEE FIGURE 60.

   Go to Torqmotor™ assembly procedure #13, to continue Torqmotor™ assembly.

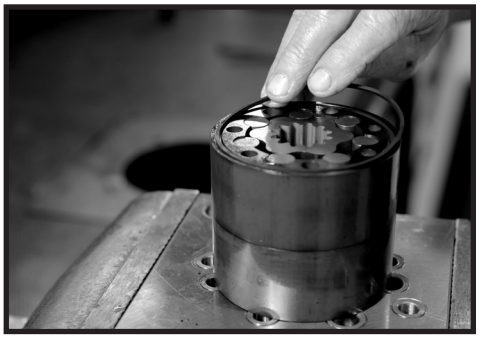

Figure 67

Final Checks

- Pressurize the Torqmotor™ with 100 p.s.i. dry air or nitrogen and submerge in solvent to check for external leaks.
- Check Torqmotor™ for rotation. Torque required to rotate coupling shaft should not be more than 50 ft. lbs. (68 N m)
- Pressure port with “A” cast under it on housing (17) is for clockwise coupling shaft rotation as viewed from the output end of coupling shaft. Pressure port with “B” cast under it is for counter clockwise coupling shaft rotation.
- Use test stand if available, to check operation of the Torqmotor™.

Hydraulic Fluid

Keep the hydraulic system filled with one of the following:

- 10W40 SE or SF manufacturers suggested oil.
- Hydraulic fluid as recommended by equipment manufacturer, but the viscosity should not drop below 50 SSU or contain less than .125% zinc anti-wear additives.

  CAUTION: Do not mix oil types. Any mixture, or an unapproved oil, could deteriorate the seals. Maintain the proper fluid level in the reservoir. When changing fluid, completely drain old oil from the system. It is suggested also that you flush the system with clean oil.

Filtration

Recommended filtration 40-50 micron.

Oil Temperature

Maximum operating temperature 200°F (93.3° C).

Parker Hannifin Corporation
Hydraulic Pump/Motor Division
Greeneville, TN 37745 US

Tips for Maintaining the Torqmotor™ Hydraulic System

- Adjust fluid level in reservoir as necessary.
- Encourage all operators to report any malfunction or accident that may have damaged the hydraulic system or component.
- Do not attempt to weld any broken Torqmotor™ component. Replace the component with original equipment only.
- Do not cold straighten, hot straighten, or bend any Torqmotor™ part.
- Prevent dirt or other foreign matter from entering the hydraulic system. Clean the area around and the filler caps before checking oil level.
- Investigate and correct any external leak in the hydraulic system, no matter how minor the leak.
- Comply with manufacturer's specifications for cleaning or replacing the filter.

CAUTION: Do not weld, braze, solder or any way alter any Torqmotor™ component.

CAUTION: Maximum operating pressure must not exceed recommended Torqmotor™ pressure capacity.

CAUTION: Always carefully inspect any system component that may have been struck or damaged during operation or in an accident. Replace any component that is damaged or that is questionable.

CAUTION: Do not force any coupling onto the Torqmotor™ coupling shaft as this could damage the unit internally.

Parker extends close technical cooperation and assistance. If problems occur which you cannot solve, please contact your local Parker approved Distributor or Parker Technical Support. Our phone number and fax number and address are on the back cover of this manual.

Parker Hannifin Corporation
Hydraulic Pump/Motor Division
Greeneville, TN 37745 US

Notes

Parker Hannifin Corporation
Hydraulic Pump/Motor Division
Greeneville, TN 37745 US

Offer of Sale

The items described in this document and other documents and descriptions provided by Parker Hannifin Corporation, its subsidiaries and its authorized distributors ("Seller") are hereby offered for sale at prices to be established by Seller. This offer and its acceptance by any customer ("Buyer") shall be governed by all of the following Terms and Conditions. Buyer's order for any item described in its document, when communicated to Seller verbally, or in writing, shall constitute acceptance of this offer. All goods, services or work described will be referred to as "Products".

1. Terms and Conditions. Seller's willingness to offer Products, or accept an order for Products, to or from Buyer is subject to these Terms and Conditions or any newer version of the terms and conditions found on-line at www.parker.com/saleterms/. Seller objects to any contrary or additional terms or conditions of Buyer's order or any other document issued by Buyer.

2. Price Adjustments; Payments. Prices stated on Seller's quote or other documentation offered by Seller are valid for 30 days, and do not include any sales, use, or other taxes unless specifically stated. Unless otherwise specified by Seller, all prices are F.C.A. Seller's facility (INCOTERMS 2010). Payment is subject to credit approval and is due 30 days from the date of invoice or such other term as required by Seller's Credit Department, after which Buyer shall pay interest on any unpaid invoices at the rate of 1.5% per month or the maximum allowable rate under applicable law.

3. Delivery Dates; Title and Risk; Shipment. All delivery dates are approximate and Seller shall not be responsible for any damages resulting from any delay. Regardless of the manner of shipment, title to any products and risk of loss or damage shall pass to Buyer upon placement of the products with the shipment carrier at Seller's facility. Unless otherwise stated, Seller may exercise its judgment in choosing the carrier and means of delivery. No deferment of shipment at Buyers' request beyond the respective dates indicated will be made except on terms that will indemnify, defend and hold Seller harmless against all loss and additional expense. Buyer shall be responsible for any additional shipping charges incurred by Seller due to Buyer's acts or omissions.

4. Warranty. Seller warrants that the Products sold hereunder shall be free from defects in material or workmanship for a period of eighteen months from the date of delivery to Buyer or 2,000 hours of normal use, whichever occurs first. The prices charged for Seller's products are based upon the exclusive limited warranty stated above, and upon the following disclaimer: **DISCLAIMER OF WARRANTY:** THIS WARRANTY COMPRISES THE SOLE AND ENTIRE WARRANTY PERTAINING TO PRODUCTS PROVIDED HEREUNDER. SELLER DISCLAIMS ALL OTHER WARRANTIES, EXPRESS AND IMPLIED, INCLUDING DESIGN, MERCHANTABILITY AND FITNESS FOR A PARTICULAR PURPOSE.

5. Claims; Commencement of Actions. Buyer shall promptly inspect all Products upon delivery. No claims for shortages will be allowed unless reported to the Seller within 10 days of delivery. No other claims against Seller will be allowed unless asserted in writing within 30 days after delivery. Buyer shall notify Seller of any alleged breach of warranty within 30 days after the date the defect is or should have been discovered by Buyer. Any action based upon breach of this agreement or upon any other claim arising out of this sale (other than an action by Seller for an amount due on any invoice) must be commenced within 12 months from the date of the breach without regard to the date breach is discovered.

6. LIMITATION OF LIABILITY. UPON NOTIFICATION, SELLER WILL, AT ITS OPTION, REPAIR OR REPLACE A DEFECTIVE PRODUCT, OR REFUND THE PURCHASE PRICE. IN NO EVENT SHALL SELLER BE LIABLE TO BUYER FOR ANY SPECIAL, INDIRECT, INCIDENTAL OR CONSEQUENTIAL DAMAGES ARISING OUT OF, OR AS THE RESULT OF, THE SALE, DELIVERY, NON-DELIVERY, SERVICING, USE OR LOSS OF USE OF THE PRODUCTS OR ANY PART THEREOF, OR FOR ANY CHARGES OR EXPENSES OF ANY NATURE INCURRED WITHOUT SELLER'S WRITTEN CONSENT, EVEN IF SELLER HAS BEEN NEGLIGENT, WHETHER IN CONTRACT, TORT OR OTHER LEGAL THEORY. IN NO EVENT SHALL SELLER'S LIABILITY UNDER ANY CLAIM MADE BY BUYER EXCEED THE PURCHASE PRICE OF THE PRODUCTS.

7. User Responsibility. The user, through its own analysis and testing, is solely responsible for making the final selection of the system and Product and assuring that all performance, endurance, maintenance, safety and warning requirements of the application are met. The user must analyze all aspects of the application and follow applicable industry standards and Product information. If Seller provides Product or system options, the user is responsible for determining that such data and specifications are suitable and sufficient for all applications and reasonably foreseeable uses of the Products or systems.

8. Loss to Buyer's Property. Any designs, tools, patterns, materials, drawings, confidential information or equipment furnished by Buyer or any other items which become Buyer's property, will be considered obsolete and may be destroyed by Seller after two consecutive years have elapsed without Buyer ordering the items manufactured using such property. Seller shall not be responsible for any loss or damage to such property while it is in Seller's possession or control.

9. Special Tooling. A tooling charge may be imposed for any special tooling, including without limitation, dies, fixtures, molds and patterns, acquired to manufacture Products. Such special tooling shall be and remain Seller's property notwithstanding payment of any charges by Buyer. In no event will Buyer acquire any interest in apparatus belonging to Seller which is utilized in the manufacture of the Products, even if such apparatus has been specially converted or adapted for such manufacture and notwithstanding any charges paid by Buyer. Unless otherwise agreed, Seller shall have the right to alter, discard or otherwise dispose of any special tooling or other property in its sole discretion at any time.

10. Buyer's Obligation; Rights of Seller. To secure payment of all sums due or otherwise, Seller shall retain a security interest in the goods delivered and this agreement shall be deemed a Security Agreement under the Uniform Commercial Code. Buyer authorizes Seller as its attorney to execute and file on Buyer's behalf all documents Seller deems necessary to perfect its security interest.

11. Improper use and Indemnity. Buyer shall indemnify, defend, and hold Seller harmless from any claim, liability, damages, lawsuits, and costs (including attorney fees), whether for personal injury, property damage, patent, trademark or copyright infringement or any other claim, brought by or incurred by Buyer, Buyer's employees, or any other person, arising out of: (a) improper selection, improper application or other misuse of Products purchased by Buyer from Seller; (b) any act or omission, negligent or otherwise, of Buyer; (c) Seller's use of patterns, plans, drawings, or specifications furnished by Buyer to manufacture Product; or (d) Buyer's failure to comply with these terms and conditions. Seller shall not indemnify Buyer under any circumstance except as otherwise provided.

12. Cancellations and Changes. Orders shall not be subject to cancellation or change by Buyer for any reason, except with Seller's written consent and upon terms that will indemnify, defend and hold Seller harmless against all direct, incidental and consequential loss or damage. Seller may change product features, specifications, designs and availability with notice to Buyer.

13. Limitation on Assignment. Buyer may not assign its rights or obligations under this agreement without the prior written consent of Seller.

14. Force Majeure. Seller does not assume the risk and shall not be liable for delay or failure to perform any of Seller's obligations by reason of circumstances beyond the reasonable control of Seller (hereinafter "Events of Force Majeure"). Events of Force Majeure shall include without limitation: accidents, strikes or labor disputes, acts of any government or government agency, acts of nature, delays or failures in delivery from carriers or suppliers, shortages of materials, or any other cause beyond Seller's reasonable control.

15. Waiver and Severability. Failure to enforce any provision of this agreement will not waive that provision nor will any such failure prejudice Seller's right to enforce that provision in the future. Invalidation of any provision of this agreement by legislation or other rule of law shall not invalidate any other provision herein. The remaining provisions of this agreement will remain in full force and effect.

16. Termination. Seller may terminate this agreement for any reason and at any time by giving Buyer thirty (30) days written notice of termination. Seller may immediately terminate this agreement, in writing, if Buyer: (a) commits a breach of any provision of this agreement (b) appointments a trustee, receiver or custodian for all or any part of Buyer's property (c) files a petition for relief in bankruptcy on its own behalf, or by a third party (d) makes an assignment for the benefit of creditors, or (e) dissolves or liquidates all or a majority of its assets.

17. Governing Law. This agreement and the sale and delivery of all Products hereunder shall be deemed to have taken place in and shall be governed and construed in accordance with the laws of the State of Ohio, as applicable to contracts executed and wholly performed therein and without regard to conflicts of laws principles. Buyer irrevocably agrees and consents to the exclusive jurisdiction and venue of the courts of Cuyahoga County, Ohio with respect to any dispute, controversy or claim arising out of or relating to this agreement.

18. Indemnity for Infringement of Intellectual Property Rights. Seller shall have no liability for infringement of any patents, trademarks, copyrights, trade dress, trade secrets or similar rights except as provided in this Section. Seller will defend and indemnify Buyer against allegations of infringement of U.S. patents, U.S. trademarks, copyrights, trade dress and trade secrets ("Intellectual Property Rights"). Seller will defend at its expense and will pay the cost of any settlement or damages awarded in an action brought against Buyer based on an allegation that a Product sold pursuant to this Agreement infringes the Intellectual Property Rights of a third party. Seller's obligation to defend and indemnify Buyer is contingent on Buyer notifying Seller within ten (10) days after Buyer becomes aware of such allegations of infringement, and Seller having sole control over the defense of any allegations or actions including all negotiations for settlement or compromise. If a Product is subject to a claim that it infringes the Intellectual Property Rights of a third party, Seller may, at its sole expense and option, procure for Buyer the right to continue using the Product, replace or modify the Product so as to make it noninfringing, or offer to accept return of the Product and return the purchase price less a reasonable allowance for depreciation. Notwithstanding the foregoing, Seller shall have no liability for claims of infringement based on information provided by Buyer, or directed to Products delivered hereunder for which the designs are specified in whole or part by Buyer, or infringements resulting from the modification, combination or use in a system of any Product sold hereunder. The foregoing provisions of this Section shall constitute Seller's sole and exclusive liability and Buyer's sole and exclusive remedy for infringement of Intellectual Property Rights.

19. Entire Agreement. This agreement contains the entire agreement between the Buyer and Seller and constitutes the final, complete and exclusive expression of the terms of sale. All prior or contemporaneous written or oral agreements or negotiations with respect to the subject matter are herein merged.

20. Compliance with Law, U.K. Bribery Act and U.S. Foreign Corrupt Practices Act. Buyer agrees to comply with all applicable laws and regulations, including both those of the United Kingdom and the United States of America, and of the country or countries of the Territory in which Buyer may operate, including without limitation the U. K. Bribery Act, the U.S. Foreign Corrupt Practices Act ("FCPA") and the U.S. Anti-Kickback Act (the "Anti-Kickback Act"), and agrees to indemnify and hold harmless Seller from the consequences of any violation of such provisions by Buyer, its employees or agents. Buyer acknowledges that they are familiar with the provisions of the U. K. Bribery Act, the FCPA and the Anti-Kickback Act, and certifies that Buyer will adhere to the requirements thereof. In particular, Buyer represents and agrees that Buyer shall not make any payment or give anything of value, directly or indirectly to any governmental official, any foreign political party or official thereof, any candidate for foreign political office, or any commercial entity or person, for the purpose of influencing such person to purchase products or otherwise benefit the business of Seller.

2/12

Parker Hannifin Corporation
Hydraulic Pump/Motor Division
Greeneville, TN 37745 US

Parker Hannifin Corporation
2745 Snapps Ferry Road
Greeneville, TN 37745 USA
Tel: (423) 639-8151
FAX: (423) 787-2418
www.parker.com/pumpmotor