Pneumatic Division
Richland, Michigan USA
www.parker.com/pneumatics

VACUUM GENERATORS

	Bulletin Number		Bulletin Description
☐	CVM-201P		MCA, Installation & Service Instructions
☐	CVM-202P		CV, Installation & Service Instructions
☐	CVM-203P		CV-CK, Installation & Service Instructions
☐	CVM-204P		CV-VR, Installation & Service Instructions
☐	CVM-206P		MC3, Installation & Service Instructions
☐	CVM-209P	Rev. 7	CVX0260B, Installation & Service Instructions
☐	CVM-210P	Rev. 1	CEK Emergency Stop, Installation & Service Instructions
☐	CVM-213P	Rev. 2	CHF, Installation & Service Instructions
☐	CVM-214P	Rev. 3	CVXCEK Design B Emergency Stop, Installation & Service Instructions
☐	CVM-215P	Rev. 1	MC72, Installation & Service Instructions
☐	CVM-216P	Rev. 1	CVX0260B Design B Installation & Service Instructions
☐	CVM-217P		CVX0360B Design B Extended Cable
☐	Safety Guide		PDN Safety Guide

Visit www.pdnplu.com for additional instruction sheets.

Parker Pneumatic

Pneumatic Division
Richland, Michigan 49083

Installation & Service Instructions
CVM-201P

MCA Vacuum Generators

ISSUED: June, 2003
Supersedes: None
Doc.# CVM-201P, NPR030526

⚠ WARNING

To avoid unpredictable system behavior that can cause personal injury and property damage:

- **Disconnect electrical supply (when necessary) before installation, servicing, or conversion.**
- **Disconnect air supply and depressurize all air lines connected to this product before installation, servicing, or conversion.**
- **Operate within the manufacturer's specified pressure, temperature, and other conditions listed in these instructions.**
- **Medium must be moisture-free if ambient temperature is below freezing.**
- **Service according to procedures listed in these instructions.**
- **Installation, service, and conversion of these products must be performed by knowledgeable personnel who understand how pneumatic products are to be applied.**
- **After installation, servicing, or conversion, air and electrical supplies (when necessary) should be connected and the product tested for proper function and leakage. If audible leakage is present, or the product does not operate properly, do not put into use.**
- **Warnings and specifications on the product should not be covered by paint, etc. If masking is not possible, contact your local representative for replacement labels.**

Introduction

Follow these instructions when installing, operating, or servicing the product.

ANSI

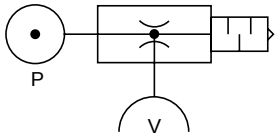

Installation

Install clip and secure MCA unit. Silencers are not included with the MCA generator series. Silencers or exhaust mufflers must be ordered separately and properly installed to manage the exhaust created by the venturi. If a tube connector is selected for the exhaust port option, plumb the exhaust to an appropriate collector.

⚠ Cautions

- Do not operate MCA generators outside the temperature range and pressures listed in the specifications section of this instruction sheet.
- All normally closed valve supply circuits will interrupt the air supply to the venturi during a power failure or Emergency Stop condition. As a result, the product being transferred may be dropped, possibly creating a hazard to the surrounding environment. To avoid hazardous situations during a power loss or Emergency Stop condition, consider a normally open valve supply circuit or an Emergency Stop system.
- It is always recommended to dedicate one suction cup to a single MCA generator for the best response and maximize the vacuum level per individual cup. If more than one cup is used per generator, the vacuum level of the pick-and-place system may drop to an unsafe level if one of the pads separates from the product.

Normally Closed Air Supply

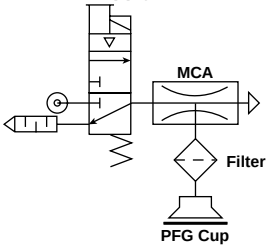

Normally Open Air Supply

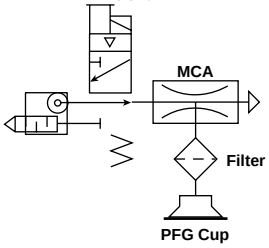

Normally Closed Air Supply with Blow-off & Optional Sensor

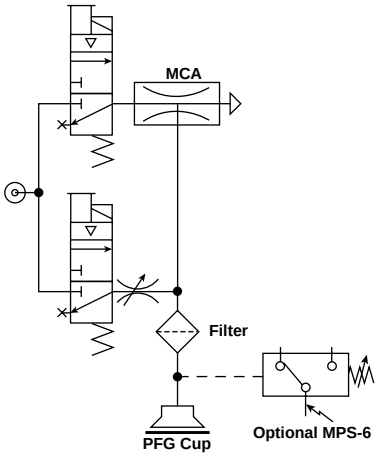

⚠ WARNING

FAILURE OR IMPROPER SELECTION OR IMPROPER USE OF THE PRODUCTS AND/OR SYSTEMS DESCRIBED HEREIN OR RELATED ITEMS CAN CAUSE DEATH, PERSONAL INJURY AND PROPERTY DAMAGE.

This document and other information from Parker Hannifin Corporation, its subsidiaries and authorized distributors provide product and/or system options for further investigation by users having technical expertise. It is important that you analyze all aspects of your application, including consequences of any failure and review the information concerning the product or systems in the current product catalog. Due to the variety of operating conditions and applications for these products or systems, the user, through its own analysis and testing, is solely responsible for making the final selection of the products and systems and assuring that all performance, safety and warning requirements of the application are met.

The products described herein, including without limitation, product features, specifications, designs, availability and pricing, are subject to change by Parker Hannifin Corporation and its subsidiaries at any time without notice.

EXTRA COPIES OF THESE INSTRUCTIONS ARE AVAILABLE FOR INCLUSION IN EQUIPMENT / MAINTENANCE MANUALS THAT UTILIZE THESE PRODUCTS. CONTACT YOUR LOCAL REPRESENTATIVE.

Specifications

Media	Non-Lubricated Air, Non-Corrosive Gases
Operating Pressure	14 to 114 PSI
Operating Temperature	32° to 120°F
Material	Polycarbonate, Aluminum Fittings

Performance

Item	Nozzle Diameter (mm)	Vacuum Degree at 70 PSI	Vacuum Flow (SCFM)	Air Consumption (SCFM)	Weight (oz)
MCA-05HS MCA-05LS	0.5	26.4 16.8	.18 .32	.43	0.6
MCA-07HS MCA-07LS	0.7	26.4 16.8	.41 .69	.79	0.8
MCA-10HS MCA-10LS	1.0	26.4 16.8	.88 1.30	1.63	0.8
MCA-13HS	1.3	26.4	1.26	2.73	0.8

Vacuum Flow (SCFM)

Nozzle Dia.	inHg										
	0	**3**	**6**	**9**	**12**	**15**	**18**	**21**	**24**	**27**	**30**
05HS	.18	.16	.19	.12	.10	.08	.07	.05	.03	—	—
05LS	.32	.25	.19	.14	.09	.04	—	—	—	—	—
07HS	.41	.37	.32	.27	.22	.18	.14	.10	.06	—	—
07LS	.69	.56	.43	.31	.19	.07	—	—	—	—	—
10HS	.88	.78	.68	.58	.47	.37	.26	.16	.06	—	—
10LS	1.30	1.07	.84	.61	.39	.16	—	—	—	—	—
13HS	1.26	1.11	.96	.81	.67	.53	.39	.25	.11	—	—

Replacement Components

Item	Model Number	Generator
Silencer	MSS-01	MCA-05HS/LS MCA-07HS/LS
Silencer	MSM-01	MCA-10HS/LS MCA-13HS
Bracket	MCA-B	MCA-05, 07, 10, 13

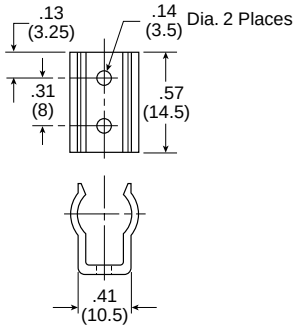

MCA-B

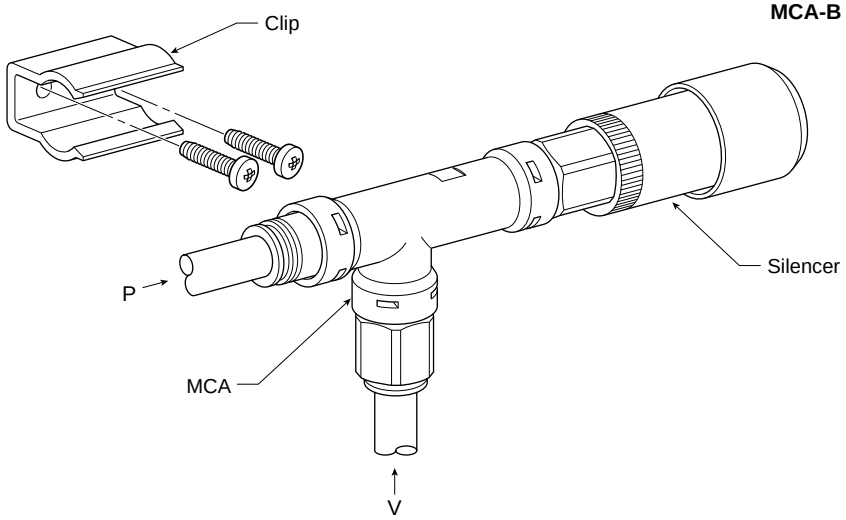

Parker Pneumatic

Pneumatic Division
Richland, Michigan 49083

Installation & Service Instructions
CVM-202P

CV Vacuum Generators

ISSUED: June, 2003
Supersedes: None
Doc.# CVM-202P, NPR030526

⚠ WARNING

To avoid unpredictable system behavior that can cause personal injury and property damage:

- **Disconnect electrical supply (when necessary) before installation, servicing, or conversion.**
- **Disconnect air supply and depressurize all air lines connected to this product before installation, servicing, or conversion.**
- **Operate within the manufacturer's specified pressure, temperature, and other conditions listed in these instructions.**
- **Medium must be moisture-free if ambient temperature is below freezing.**
- **Service according to procedures listed in these instructions.**
- **Installation, service, and conversion of these products must be performed by knowledgeable personnel who understand how pneumatic products are to be applied.**
- **After installation, servicing, or conversion, air and electrical supplies (when necessary) should be connected and the product tested for proper function and leakage. If audible leakage is present, or the product does not operate properly, do not put into use.**
- **Warnings and specifications on the product should not be covered by paint, etc. If masking is not possible, contact your local representative for replacement labels.**

Introduction

Follow these instructions when installing, operating, or servicing the product.

ANSI

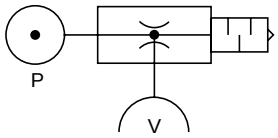

Installation

Secure CV unit. Silencers are included with the CV generator series. If a tube connector is selected by the user for the exhaust port as opposed to the silencer, plumb the exhaust to an appropriate collector.

⚠ Cautions

- Do not operate CV generators outside the temperature range and pressures listed in the specifications section of this instruction sheet.
- All normally closed valve supply circuits will interrupt the air supply to the venturi during a power failure or Emergency Stop condition. As a result, the product being transferred may be dropped, possibly creating a hazard to the surrounding environment. To avoid hazardous situations during a power loss or Emergency Stop condition, consider a normally open valve supply circuit or an Emergency Stop system.
- It is always recommended to dedicate one suction cup to a single MCA generator for the best response and maximize the vacuum level per individual cup. If more than one cup is used per generator, the vacuum level of the pick-and-place system may drop to an unsafe level if one of the pads separates from the product.

Normally Closed Air Supply

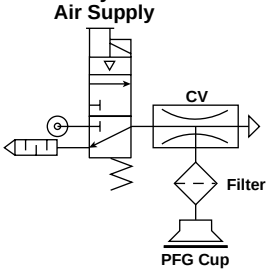

Normally Open Air Supply

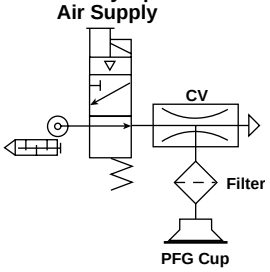

Normally Closed Air Supply with Blow-off & Optional Sensor

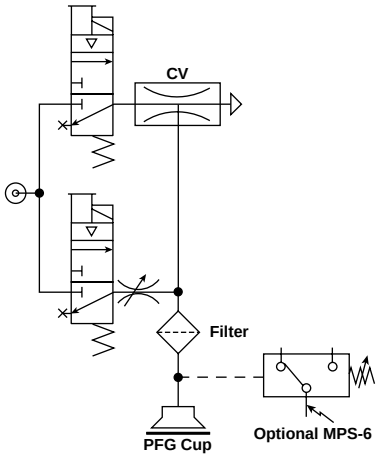

⚠ WARNING

FAILURE OR IMPROPER SELECTION OR IMPROPER USE OF THE PRODUCTS AND/OR SYSTEMS DESCRIBED HEREIN OR RELATED ITEMS CAN CAUSE DEATH, PERSONAL INJURY AND PROPERTY DAMAGE.

This document and other information from Parker Hannifin Corporation, its subsidiaries and authorized distributors provide product and/or system options for further investigation by users having technical expertise. It is important that you analyze all aspects of your application, including consequences of any failure and review the information concerning the product or systems in the current product catalog. Due to the variety of operating conditions and applications for these products or systems, the user, through its own analysis and testing, is solely responsible for making the final selection of the products and systems and assuring that all performance, safety and warning requirements of the application are met.

The products described herein, including without limitation, product features, specifications, designs, availability and pricing, are subject to change by Parker Hannifin Corporation and its subsidiaries at any time without notice.

EXTRA COPIES OF THESE INSTRUCTIONS ARE AVAILABLE FOR INCLUSION IN EQUIPMENT / MAINTENANCE MANUALS THAT UTILIZE THESE PRODUCTS. CONTACT YOUR LOCAL REPRESENTATIVE.

Specifications

Media	Non-Lubricated Air, Non-Corrosive Gases
Operating Pressure	14 to 114 PSI
Operating Temperature	32 to 120°F
Material	**Body:** Aluminum, 303 Stainless, or PFTE **Nozzle:** Nickel plated brass, 303 Stainless, PFTE

Performance

Item	Nozzle Diameter (mm)	Vacuum Degree at 70 PSI	Vacuum Flow (SCFM)	Air Consumption (SCFM)	Weight (oz)
CV-05HS CV-05LS	0.5	25.8 17	0.21 0.32	.46	2.8
CV-10HS CV-10LS	1.0	27.3 17	0.95 1.27	1.55	2.8
CV-15HS CV-15LS	1.5	27.3 17	2.22 3.35	3.53	4.9
CV-20HS CV-20LS	2.0	25.8 17	3.88 5.85	6.36	12.3
CV-25HS CV-25LS	2.5	27.3 17	5.65 8.83	9.36	25.6
CV-30AHS CV-30ALS	3.0	27.3 171	7.94 12.36	13.60	29.8

Vacuum Flow (SCFM)

Nozzle Dia.	inHg										
	0	**3**	**6**	**9**	**12**	**15**	**18**	**21**	**24**	**27**	**30**
05HS	.21	.19	.17	.15	.13	.11	.09	.07	.05	.03	—
05LS	.32	.27	.22	.17	.12	.06	—	—	—	—	—
10HS	.95	.85	.75	.65	.55	.45	.35	.25	.15	.05	—
10LS	1.27	1.05	.83	.59	.38	.17	—	—	—	—	—
15HS	2.22	1.98	1.74	1.50	1.26	1.01	.76	.51	.26	.01	—
15LS	3.35	2.79	2.23	1.67	1.10	.53	—	—	—	—	—
20HS	3.88	3.45	3.02	2.59	2.16	1.73	1.30	.87	.44	.01	—
20LS	5.85	5.09	4.03	2.97	1.91	.85	—	—	—	—	—
25HS	5.65	5.11	4.57	4.03	3.49	2.94	2.39	1.85	1.31	.77	—
25LS	8.83	7.29	5.75	4.21	2.67	1.13	—	—	—	—	—
30HS	7.94	7.16	6.38	5.62	4.84	4.06	3.28	2.50	1.17	.92	—
30LS	12.36	10.24	8.12	6.00	3.89	1.48	—	—	—	—	—

Replacement Components

Item	Model Number	Generator
Silencer	MSS-01	CV-05HS/LS CV-10HS/LS
Silencer	MSM-01	CV-15HS/LS
Silencer	MSL-02	CV-20HS/LS
Silencer	MS6-01	CV-25HS/LS CV-30AHS/LS

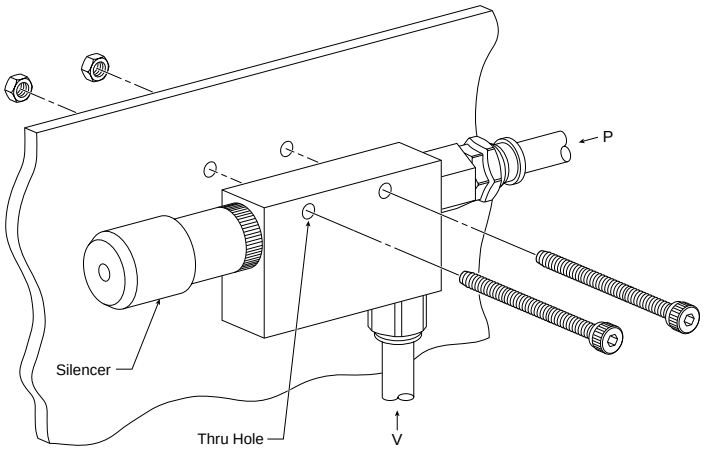

Parker Pneumatic

Pneumatic Division
Richland, Michigan 49083

Installation & Service Instructions
CVM-203P

CV-CK Vacuum Generators

ISSUED: June, 2003
Supersedes: None
Doc.# CVM-203P, NPR030526

⚠ WARNING

To avoid unpredictable system behavior that can cause personal injury and property damage:

- **Disconnect electrical supply (when necessary) before installation, servicing, or conversion.**
- **Disconnect air supply and depressurize all air lines connected to this product before installation, servicing, or conversion.**
- **Operate within the manufacturer's specified pressure, temperature, and other conditions listed in these instructions.**
- **Medium must be moisture-free if ambient temperature is below freezing.**
- **Service according to procedures listed in these instructions.**
- **Installation, service, and conversion of these products must be performed by knowledgeable personnel who understand how pneumatic products are to be applied.**
- **After installation, servicing, or conversion, air and electrical supplies (when necessary) should be connected and the product tested for proper function and leakage. If audible leakage is present, or the product does not operate properly, do not put into use.**
- **Warnings and specifications on the product should not be covered by paint, etc. If masking is not possible, contact your local representative for replacement labels.**

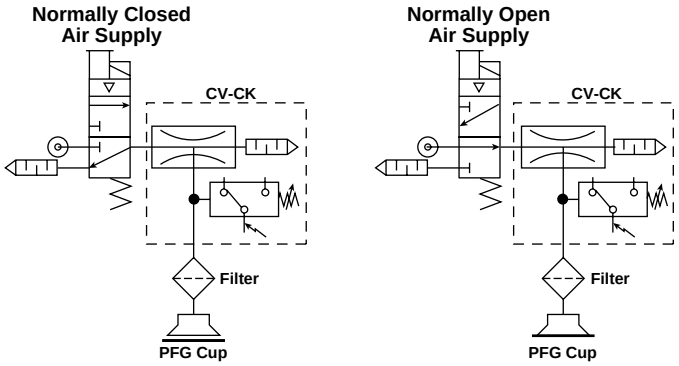

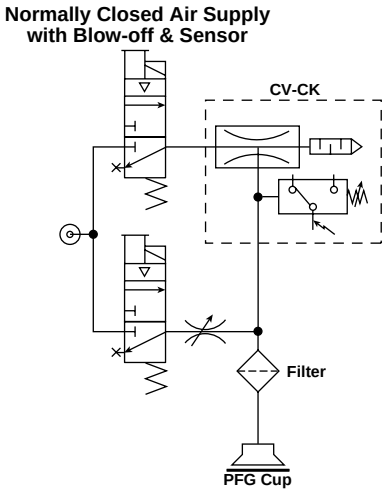

Introduction

Follow these instructions when installing, operating, or servicing the product.

Installation

Install clip and secure CV-CK unit. Silencers are included with the CV-CK generator series. If a tube connector is selected for the exhaust port option, plumb the exhaust to an appropriate collector.

⚠ Cautions

- Do not operate CV-CK generators outside the temperature range and pressures listed in the specifications section of this instruction sheet.
- All normally closed valve supply circuits will interrupt the air supply to the venturi during a power failure or Emergency Stop condition. As a result, the product being transferred may be dropped, possibly creating a hazard to the surrounding environment. To avoid hazardous situations during a power loss or Emergency Stop condition, consider a normally open valve supply circuit or an Emergency Stop system.
- It is always recommended to dedicate one suction cup to a single CV-CK generator for the best response and maximize the vacuum level per individual cup. If more than one cup is used per generator, the vacuum level of the pick-and-place system may drop to an unsafe level if one of the pads separates from the product.

⚠ WARNING

FAILURE OR IMPROPER SELECTION OR IMPROPER USE OF THE PRODUCTS AND/OR SYSTEMS DESCRIBED HEREIN OR RELATED ITEMS CAN CAUSE DEATH, PERSONAL INJURY AND PROPERTY DAMAGE.

This document and other information from Parker Hannifin Corporation, its subsidiaries and authorized distributors provide product and/or system options for further investigation by users having technical expertise. It is important that you analyze all aspects of your application, including consequences of any failure and review the information concerning the product or systems in the current product catalog. Due to the variety of operating conditions and applications for these products or systems, the user, through its own analysis and testing, is solely responsible for making the final selection of the products and systems and assuring that all performance, safety and warning requirements of the application are met.

The products described herein, including without limitation, product features, specifications, designs, availability and pricing, are subject to change by Parker Hannifin Corporation and its subsidiaries at any time without notice.

EXTRA COPIES OF THESE INSTRUCTIONS ARE AVAILABLE FOR INCLUSION IN EQUIPMENT / MAINTENANCE MANUALS THAT UTILIZE THESE PRODUCTS. CONTACT YOUR LOCAL REPRESENTATIVE.

Specifications

Media	Non-Lubricated Compressed Air, Non-Corrosive Gases
Operating Pressure	14 to 114 PSI
Operating Temperature	32 to 140°F
Material	**Body:** Aluminum **Nozzle:** Nickel Plated Brass
Setting Range	5.9 to15.74 inHg
Accuracy	± 1.574 inHg
Hysteresis	1.08 to 3.93 inHg
Air Circuit	Normally Open
Switch Output	AC125V: 5A, AC250V: 3A, DC250V: 0.2A

Performance

Item	Nozzle Diameter (mm)	Vacuum Degree at 70 PSI	Vacuum Flow (SCFM)	Air Consumption (SCFM)	Weight (oz)
CV-05HS-CK CV-05LS-CK	0.5	25.8 17	0.21 0.32	.46	4.2
CV-10HS-CK CV-10LS-CK	1.0	27.3 17	0.95 1.27	1.55	4.2
CV-15HS-CK CV-15LS-CK	1.5	27.3 17	2.22 3.35	3.53	6.7
CV-20HS-CK CV-20LS-CK	2.0	25.8 17	3.88 5.85	6.36	16.1

Vacuum Flow (SCFM)

Nozzle Dia.	inHg										
	0	**3**	**6**	**9**	**12**	**15**	**18**	**21**	**24**	**27**	**30**
05HS	.21	.19	.17	.15	.13	.11	.09	.07	.05	.03	—
05LS	.32	.27	.22	.17	.12	.06	—	—	—	—	—
10HS	.95	.85	.75	.65	.55	.45	.35	.25	.15	.05	—
10LS	1.27	1.05	.83	.59	.38	.17	—	—	—	—	—
15HS	2.22	1.98	1.74	1.5	1.26	1.01	.76	.51	.25	.01	—
15LS	3.35	2.79	2.23	1.67	1.10	.53	—	—	—	—	—
20HS	3.88	3.45	3.02	2.59	2.16	1.73	1.30	.87	.44	.01	—
20LS	5.85	5.09	4.03	2.97	1.91	.85	—	—	—	—	—

Replacement Components

Item	Model Number	Generator
Silencer	MSS-01	CV-05HS/LS-CK CV-10HS/LS-CK
Silencer	MSM-01	CV-15HS/LS-CK
Silencer	MSL-02	CV-20HS/LS-CK
Mechanical Switch	CV-CK	CV-05 thru 20

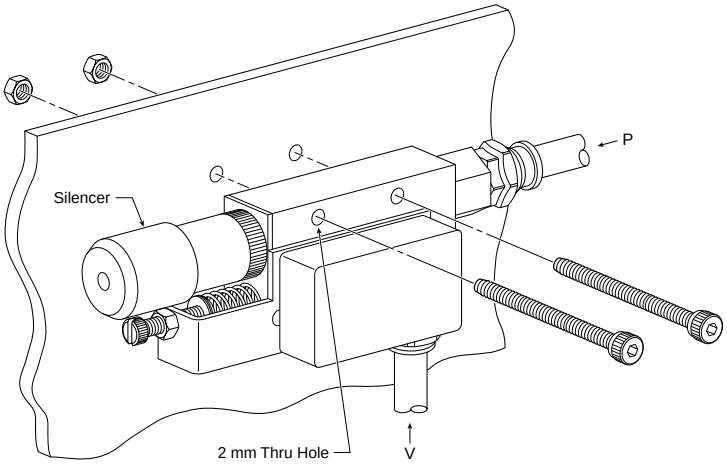

Parker Pneumatic

Pneumatic Division
Richland, Michigan 49083

Installation & Service Instructions
CVM-204P

CV-VR Vacuum Generators

ISSUED: June, 2003
Supersedes: None
Doc.# CVM-204P, NPR030526

⚠ WARNING

To avoid unpredictable system behavior that can cause personal injury and property damage:

- **Disconnect electrical supply (when necessary) before installation, servicing, or conversion.**
- **Disconnect air supply and depressurize all air lines connected to this product before installation, servicing, or conversion.**
- **Operate within the manufacturer's specified pressure, temperature, and other conditions listed in these instructions.**
- **Medium must be moisture-free if ambient temperature is below freezing.**
- **Service according to procedures listed in these instructions.**
- **Installation, service, and conversion of these products must be performed by knowledgeable personnel who understand how pneumatic products are to be applied.**
- **After installation, servicing, or conversion, air and electrical supplies (when necessary) should be connected and the product tested for proper function and leakage. If audible leakage is present, or the product does not operate properly, do not put into use.**
- **Warnings and specifications on the product should not be covered by paint, etc. If masking is not possible, contact your local representative for replacement labels.**

Introduction

Follow these instructions when installing, operating, or servicing the product.

ANSI

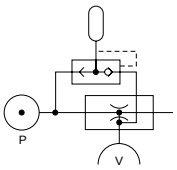

Installation

Secure the CV-VR unit. Silencers are not included with the CV-VR generator series. Silencers or exhaust mufflers must be ordered separately and properly installed to manage the exhaust created by the venturi. If a tube connector is selected for the exhaust port option, plumb the exhaust to an appropriate collector.

⚠ Cautions

- Do not operate CV-VR generators outside the temperature range and pressures listed in the specifications section of this instruction sheet.
- All normally closed valve supply circuits will interrupt the air supply to the venturi during a power failure or Emergency Stop condition. As a result, the product being transferred may be dropped, possibly creating a hazard to the surrounding environment. To avoid hazardous situations during a power loss or Emergency Stop condition, consider a normally open valve supply circuit or an Emergency Stop system.
- It is always recommended to dedicate one suction cup to a single CV-CR generator for the best response and maximize the vacuum level per individual cup. If more than one cup is used per generator, the vacuum level of the pick-and-place system may drop to an unsafe level if one of the pads separates from the product.

Energize the Normally Closed valve to initiate vacuum. When De-energized, accumulated blow-off pressure automatically releases the product.

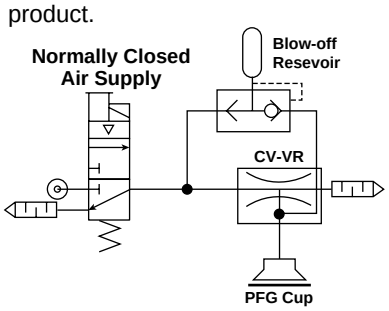

Energize the Normally Open valve to Deactivate vacuum. When Energized, accumulated blow-off pressure automatically releases the product.

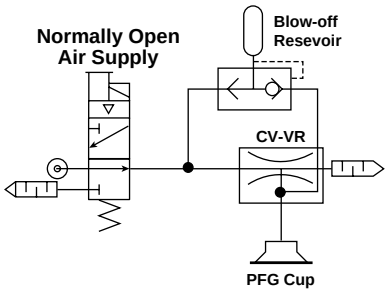

⚠ WARNING

FAILURE OR IMPROPER SELECTION OR IMPROPER USE OF THE PRODUCTS AND/OR SYSTEMS DESCRIBED HEREIN OR RELATED ITEMS CAN CAUSE DEATH, PERSONAL INJURY AND PROPERTY DAMAGE.

This document and other information from Parker Hannifin Corporation, its subsidiaries and authorized distributors provide product and/or system options for further investigation by users having technical expertise. It is important that you analyze all aspects of your application, including consequences of any failure and review the information concerning the product or systems in the current product catalog. Due to the variety of operating conditions and applications for these products or systems, the user, through its own analysis and testing, is solely responsible for making the final selection of the products and systems and assuring that all performance, safety and warning requirements of the application are met.

The products described herein, including without limitation, product features, specifications, designs, availability and pricing, are subject to change by Parker Hannifin Corporation and its subsidiaries at any time without notice.

EXTRA COPIES OF THESE INSTRUCTIONS ARE AVAILABLE FOR INCLUSION IN EQUIPMENT / MAINTENANCE MANUALS THAT UTILIZE THESE PRODUCTS. CONTACT YOUR LOCAL REPRESENTATIVE.

Specifications

Media	Non-Lubricated Compressed Air, Non-Corrosive Gases
Operating Pressure	21 to 103 PSI
Operating Temperature	32 to 120°F
Material	**Body:** Die-Cast Aluminum **Packing:** NBR

Performance

Item	Nozzle Diameter (mm)	Blow-off Time (s) 30cc Max.	Vacuum Degree at 70 PSI (inHg)	Vacuum Flow (SCFM)	Air Consumption (SCFM)	Weight (oz)
CV-15HS-VR	1.5	0.20	27.3	2.22	3.53	8.9

Vacuum Flow (SCFM)

Nozzle Dia.	inHg										
	0	3	6	9	12	15	18	21	24	27	30
15HS	2.22	1.98	1.74	1.5	1.26	1.01	.76	.51	.25	.01	—

Accessories

Item	Model Number	Generator
Silencer	MSM-01	CV-15HS-VR*

* N (NPT) or G (BSPP)

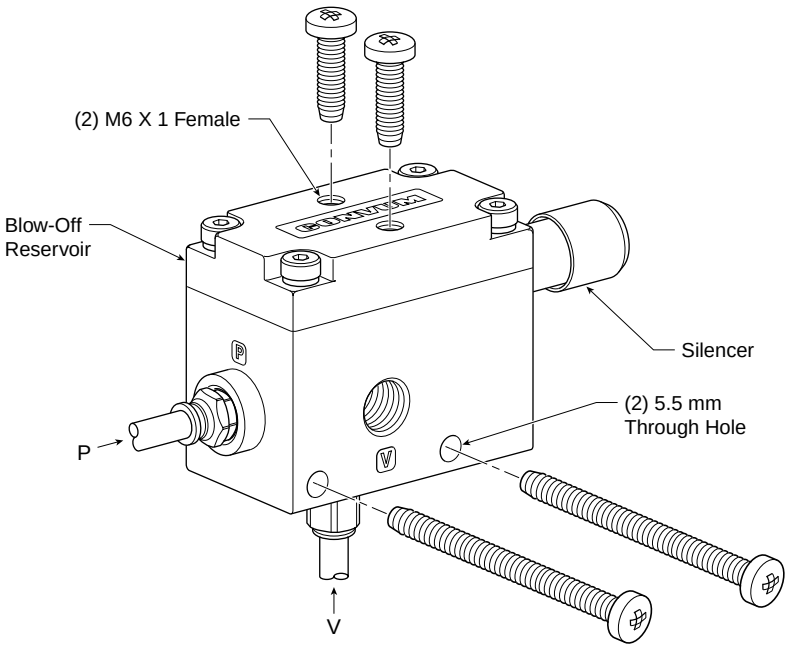

Parker Pneumatic

Pneumatic Division
Richland, Michigan 49083

Installation & Service Instructions
CVM-206P

MC3 Vacuum Generators

ISSUED: June, 2003
Supersedes: None
Doc.# CVM-206P, NPR030526

⚠ WARNING

To avoid unpredictable system behavior that can cause personal injury and property damage:

- **Disconnect electrical supply (when necessary) before installation, servicing, or conversion.**
- **Disconnect air supply and depressurize all air lines connected to this product before installation, servicing, or conversion.**
- **Operate within the manufacturer's specified pressure, temperature, and other conditions listed in these instructions.**
- **Medium must be moisture-free if ambient temperature is below freezing.**
- **Service according to procedures listed in these instructions.**
- **Installation, service, and conversion of these products must be performed by knowledgeable personnel who understand how pneumatic products are to be applied.**
- **After installation, servicing, or conversion, air and electrical supplies (when necessary) should be connected and the product tested for proper function and leakage. If audible leakage is present, or the product does not operate properly, do not put into use.**
- **Warnings and specifications on the product should not be covered by paint, etc. If masking is not possible, contact your local representative for replacement labels.**

Introduction

Follow these instructions when installing, operating, or servicing the product.

⚠ Cautions

- Do not use or expose the MC3 with fluids or corrosive gases. Vacuum Venturi's are designed to be used with non-lubricated, non-corrosive, compressed air.
- Do not operate MC3 generators outside the temperature range and pressures listed in the specifications section of this instruction sheet. Regulate the compressed air to 70PSI and filtrate with a maximum 40 micron filter. Non-lubricated compressed air will maintain the life and vacuum level of the generator.

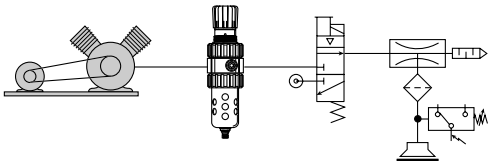

- All normally closed vacuum circuits will interrupt the air supply to the venturi during a power failure or Emergency Stop condition. As a result, the product being transferred may be dropped, possibly creating a hazard to the surrounding environment. To avoid hazardous situations during a power loss or Emergency Stop condition, consider a normally open vacuum circuit.
- Check the insulation of all lead wires after installation to avoid shorts. Properly secure all lead wires to avoid stress or repeated movement that may fray lead wires.
- Some electrical components are diode or zener diode protected. When installing solenoids and sensors, check the polarity of the component before applying power. Apply the appropriate voltage to the solenoids and sensors. Inappropriate voltage, shorts, or surges may damage the circuitry.

Normally Closed Vacuum Circuit

The Vacuum Pilot is Energized to Activate Vacuum

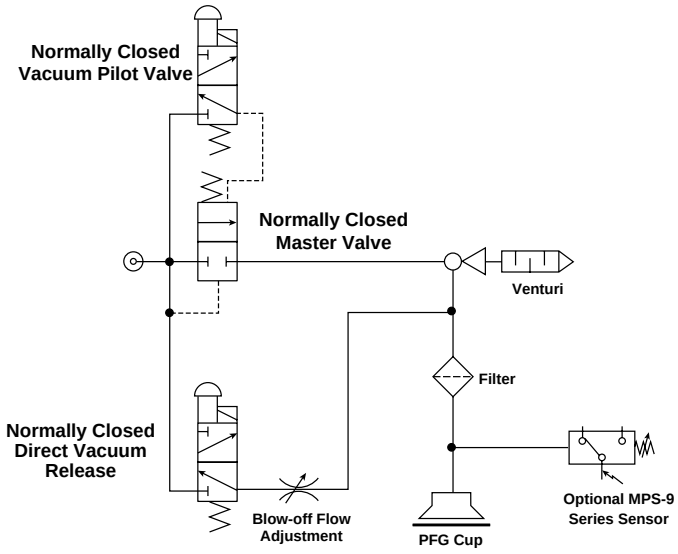

⚠ WARNING

FAILURE OR IMPROPER SELECTION OR IMPROPER USE OF THE PRODUCTS AND/OR SYSTEMS DESCRIBED HEREIN OR RELATED ITEMS CAN CAUSE DEATH, PERSONAL INJURY AND PROPERTY DAMAGE.

This document and other information from Parker Hannifin Corporation, its subsidiaries and authorized distributors provide product and/or system options for further investigation by users having technical expertise. It is important that you analyze all aspects of your application, including consequences of any failure and review the information concerning the product or systems in the current product catalog. Due to the variety of operating conditions and applications for these products or systems, the user, through its own analysis and testing, is solely responsible for making the final selection of the products and systems and assuring that all performance, safety and warning requirements of the application are met.

The products described herein, including without limitation, product features, specifications, designs, availability and pricing, are subject to change by Parker Hannifin Corporation and its subsidiaries at any time without notice.

EXTRA COPIES OF THESE INSTRUCTIONS ARE AVAILABLE FOR INCLUSION IN EQUIPMENT / MAINTENANCE MANUALS THAT UTILIZE THESE PRODUCTS. CONTACT YOUR LOCAL REPRESENTATIVE.

Specifications

Media	Non-Lubricated Compressed Air, Non-Corrosive Gases
Operating Pressure	21 to 84 PSI (1.5 to 6 kgf/cm^2)
Optimum Operating Pressure	70 PSI (5 kgf/cm^2) or 50 PSI (3.5 kgf/cm^2)
Humidity	35 to 85%
Pressure Port	M5 Female
Vacuum Port	M5 Female
Operating Temperature	32 to 140°F (0 to 60°C)
Material	Aluminum, Polyamide, NBR

Vacuum Pilot Valve & Blow-off Release Valve

Type of Control Valve	Direct & Pilot Valve
Manual Operation	Manual Override Operation Non-Locking
Electrical Connection	Clip Type Connector with LED and Surge Protection, 500mm Lead Length
Power Supply	24VDC ± 10%
Power Consumption	0.9W
Pressure Range	21 to 84 PSI (1.5 to 6 kgf/cm^2)
Air Supply	Normally Closed

Performance

Item	Nozzle Diameter (mm)	Vacuum Degree at 70 PSI	Vacuum Flow (SCFM)	Air Consumption (SCFM)	Weight oz (g)
05HS	0.5	25.98	0.19	.35	2.04 (58)
05HR	0.5	25.98	0.14	.35	2.04 (58)
07HS	0.7	25.98	0.39	.79	2.04 (58)
07HR	0.7	25.98	0.32	.79	2.04 (58)
10HS	1.0	25.98	0.71	1.55	2.04 (58)
10HR	1.0	25.98	0.53	1.55	2.04 (58)

Vacuum Flow (SCFM)

Nozzle Dia.	inHg										
	0	3	6	9	12	15	18	21	24	27	30
05HS	.19	.17	.15	.13	.11	.09	.07	.05	.03	—	—
05HR	.14	.12	.10	.09	.08	.07	.06	.44	.02	—	—
07HS	.39	.35	.31	.27	.23	.19	.14	.09	.05	—	—
07HR	.32	.29	.25	.22	.19	.15	.11	.07	.04	—	—
10HS	.71	.63	.55	.47	.39	.31	.23	.16	..08	—	—
10HR	.53	.47	.41	.35	.29	.23	.17	.11	.06	—	—

Replacement Components

Item	Part Number	Description
1	MC3-S	Silencer
2, 3, 4	MC3-F	Filter Kit
3	MC3-E	Filter Element
5	D2-270428-3	Vacuum Pilot Valve
6	C2-284177-3	Blow-off Valve
7	MC3-5L	500mm Clip Lead
8	MC3-B	Mounting Kit

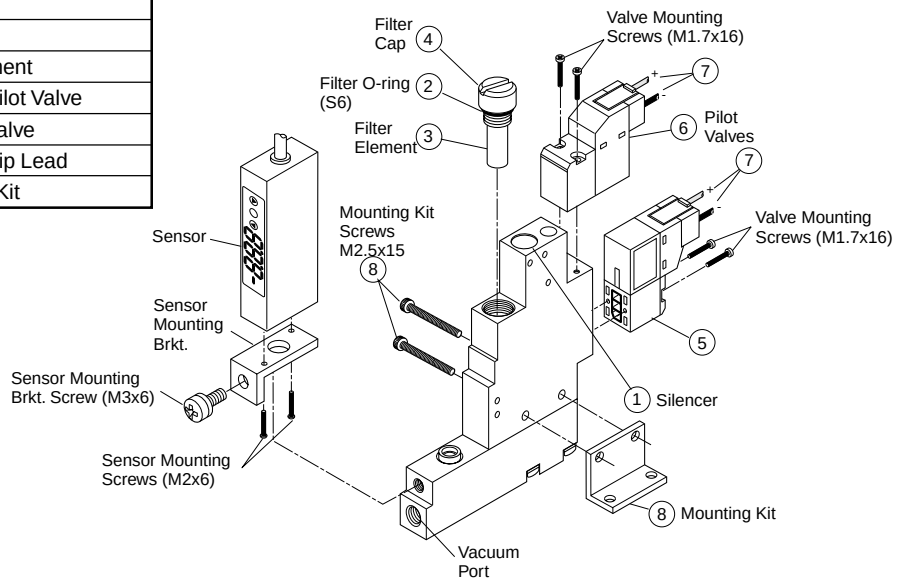

MC3 with MPS-9 Sensor

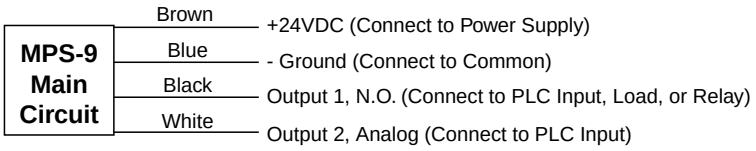

PLC System

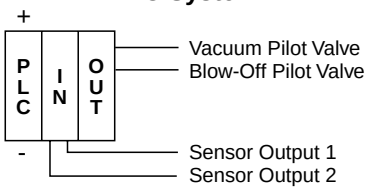

Vacuum System Programming

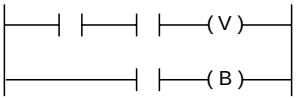

Output Adjustment

Sensor functions and outputs are programmed by touch panel.

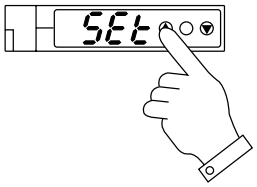

MPS-71 Series with Remote Sensors V6 or V8

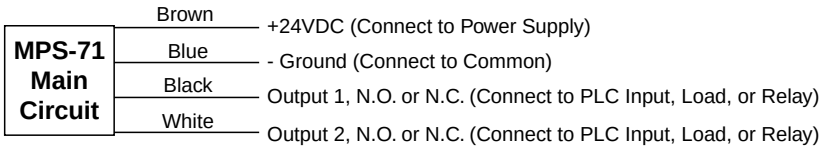

PLC System

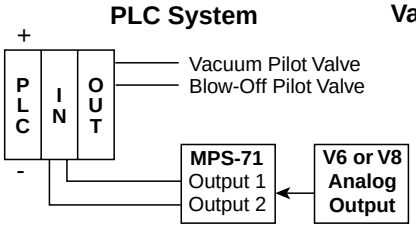

Vacuum System Programming

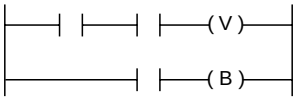

Output Adjustment

Sensor functions and outputs are programmed by touch panel.

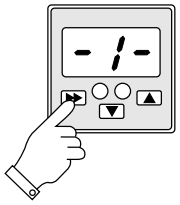

MPS-74 Series with Remote Sensors V6 or V8

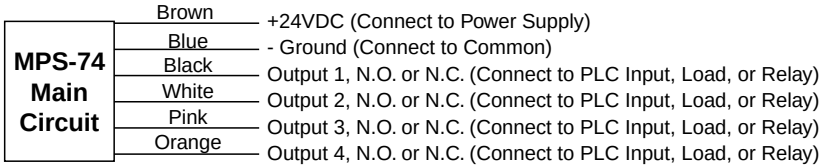

PLC System

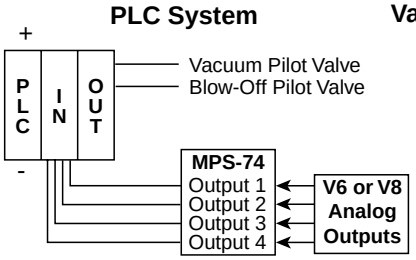

Vacuum System Programming

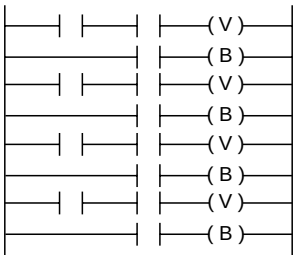

Output Adjustment

Sensor functions and outputs are programmed by touch panel.

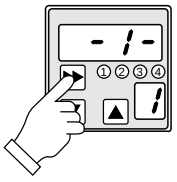

Output Setting

Maximize the difference between the “Part -Off” and “Part-On” vacuum levels by selecting the appropriate tubing I.D. and length from the generator to the cup. The part present output must be set between the “Part -Off” and “Part-On” vacuum levels. If the difference between the “Part -Off” and “Part-On” vacuum levels is minimal, remote sensing at the suction cup is recommended with MPS-6 or MPS-8 sensors.

For most material handling applications, the part present output can be set near the upper limit of the output range.

For high speed pick and place applications, the part present output can be set near the lower limit of the output range. This reduces the output response time of the sensor. Output response and accuracy are critical to the overall performance of the system. Remote sensing is recommended here.

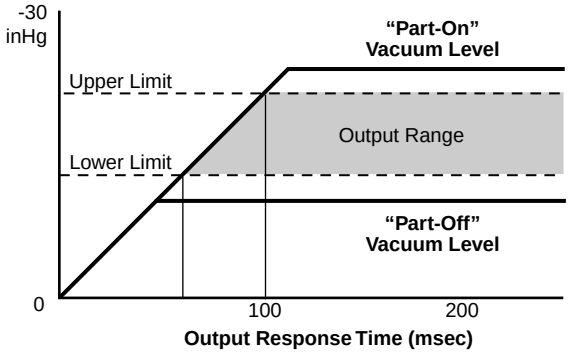

Manifold

4-Station Manifold with Sensor Base Shown

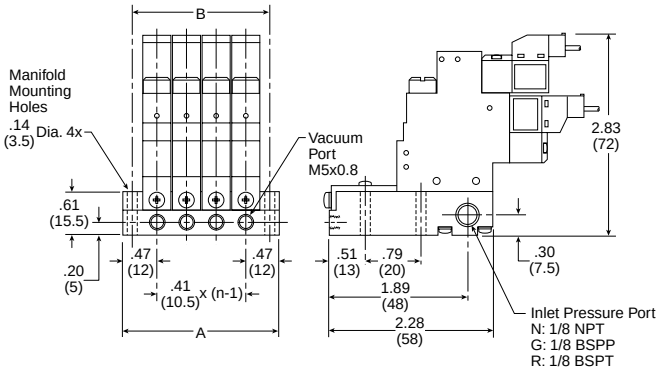

n	2	3	4	5	6	7	8
A	1.08 27.5	1.50 38	1.91 48.5	2.32 59	2.74 69.5	3.15 80	3.56 90.5
B	1.36 34.5	1.77 45	2.19 55.5	2.60 66	3.01 76.5	3.43 87	3.84 97.5

Inches (mm)
n = Number of Stations

4-Station Manifold without Sensor Base Shown

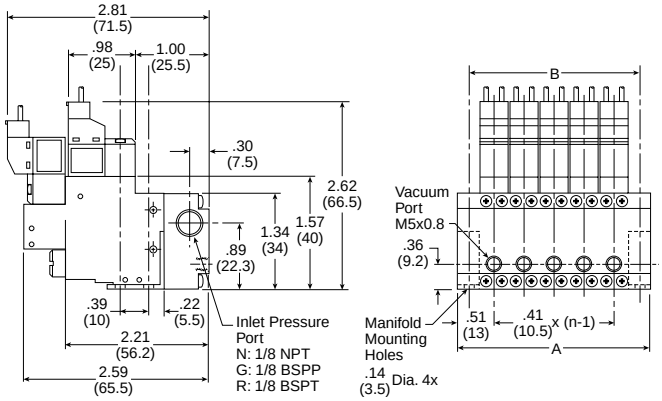

n	2	3	4	5	6	7	8
A	1.14 29	1.56 39.5	1.97 50	2.38 60.5	2.80 71	3.21 81.5	3.62 92
B	1.44 36.5	1.85 47	2.26 57.5	2.68 68	3.09 78.5	3.50 89	3.92 99.5

Inches (mm)
n = Number of Stations

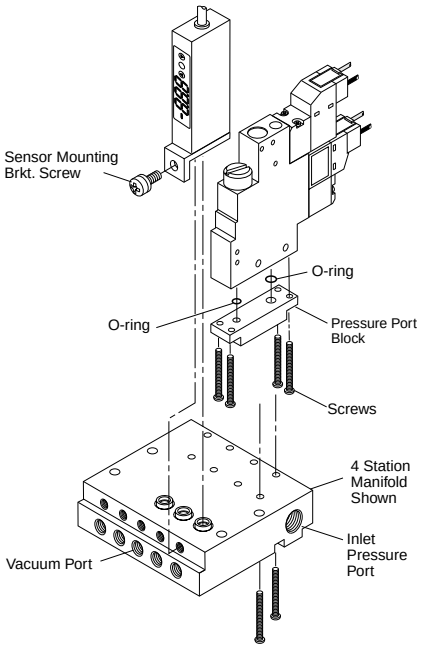

Manifold Assembly with Sensor
Remove Pressure Port Block and use existing O-ring and Screw to secure the MC3 unit to the Manifold.

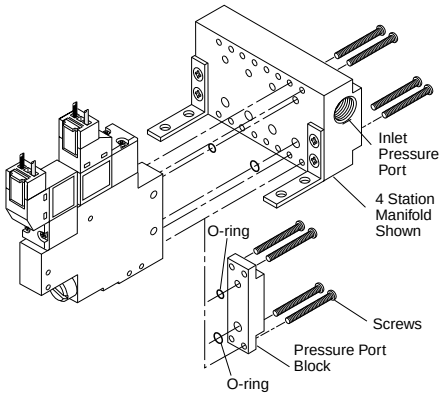

Manifold Assembly
Remove Pressure Port Block and use existing O-ring and Screw to secure the MC3 unit to the Manifold.

Accessories

MC3 Generator Blank Kit MC3-MM

MC3 Sensor Blank Kit MC3-Z9

Kits Include: Blank Plate, Screws & Gasket

Pneumatic Division
Richland, Michigan 49083

Installation & Service Instructions
CVM209P

CVX0260B

ISSUED: December, 2011
Supersedes: October, 2011
Doc.# CVM-209P, EN# 111027, Rev. 7

⚠ WARNING

To avoid unpredictable system behavior that can cause personal injury and property damage:

- **Disconnect electrical supply (when necessary) before installation, servicing, or conversion.**
- **Disconnect air supply and depressurize all air lines connected to this product before installation, servicing, or conversion.**
- **Operate within the manufacturer's specified pressure, temperature, and other conditions listed in these instructions.**
- **Medium must be moisture-free if ambient temperature is below freezing.**
- **Service according to procedures listed in these instructions.**
- **Installation, service, and conversion of these products must be performed by knowledgeable personnel who understand how pneumatic products are to be applied.**
- **After installation, servicing, or conversion, air and electrical supplies (when necessary) should be connected and the product tested for proper function and leakage. If audible leakage is present, or the product does not operate properly, do not put into use.**
- **Warnings and specifications on the product should not be covered by paint, etc. If masking is not possible, contact your local representative for replacement labels.**

Safety Guide

For omplete information on recommended application guidelines, see the Safety Guide section of Pneumatic Division catalogs or you can download the **Pneumatic Division Safety Guide** at: www.parker.com/safety

Introduction

Follow these instructions when installing, operating, or servicing the product.

⚠ Cautions

- The CVX0260B does not require lubrication to function like other pneumatic components.
- The CVX0260B functions efficiently at 70 PSI while in operation. Regulate the inlet air pressure to 70 PSI during operations.
- Inlet compressed air levels below 70 PSI will yield lower vacuum levels and could effect the overall performance of the system.
- Filtrate the inlet air to protect the CVX0260B against contaminating matter typically found in compressed air systems (i.e. rust, water, compressor oil, or other foreign particles). A standard 40 micron filter is recommended.
- The CVX0260B inlet compressed air must be filtered, regulated, and periodically maintenance to insure maximum operating performance and warranty.
- The air economizing functions and check valves require proper fittings and suction cups to prevent vacuum leakage. The vacuum ports are 3/8" G or 3/8" NPT female threads and require appropriate fittings to properly seal the systems. For NPT fittings, use a dry seal or tape to seal the fittings throughout the system.
- Primary vacuum filtration is always recommended between the cups and the vacuum ports of the generator. Collection of particles and other matter from the work piece will reduce the maximum vacuum level of the unit over a period of use. The frequency of the filter maintenance will vary with each environment and application.
- Each CVX0260B incorporates a small filter housed on the body to protect the internal components of the generator. Additional maintenance of this filter will also vary with each environment and application.

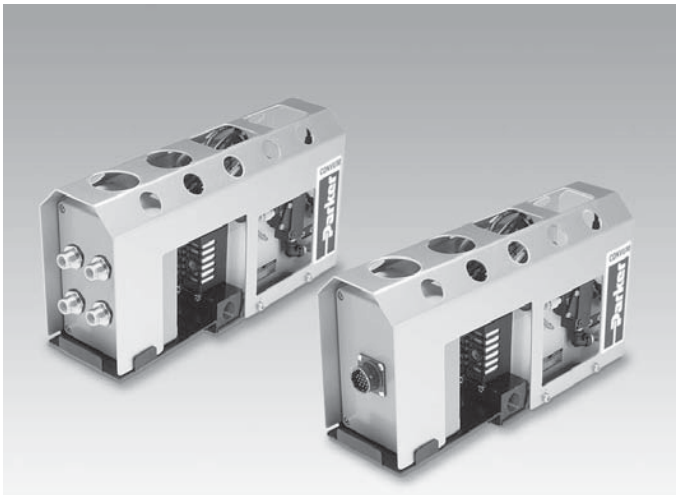

CVX0260B with M12 Connectors & M18 Connector

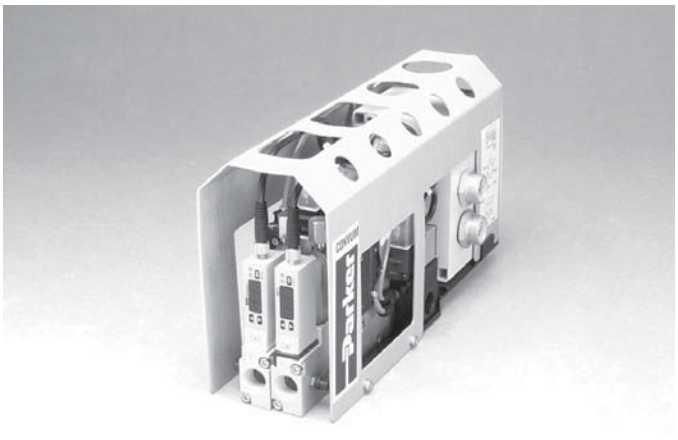

CVX0260B with DeviceNET

⚠ WARNING

FAILURE OR IMPROPER SELECTION OR IMPROPER USE OF THE PRODUCTS AND/OR SYSTEMS DESCRIBED HEREIN OR RELATED ITEMS CAN CAUSE DEATH, PERSONAL INJURY AND PROPERTY DAMAGE.

This document and other information from Parker Hannifin Corporation, its subsidiaries and authorized distributors provide product and/or system options for further investigation by users having technical expertise. It is important that you analyze all aspects of your application, including consequences of any failure and review the information concerning the product or systems in the current product catalog. Due to the variety of operating conditions and applications for these products or systems, the user, through its own analysis and testing, is solely responsible for making the final selection of the products and systems and assuring that all performance, safety and warning requirements of the application are met.

The products described herein, including without limitation, product features, specifications, designs, availability and pricing, are subject to change by Parker Hannifin Corporation and its subsidiaries at any time without notice.

EXTRA COPIES OF THESE INSTRUCTIONS ARE AVAILABLE FOR INCLUSION IN EQUIPMENT / MAINTENANCE MANUALS THAT UTILIZE THESE PRODUCTS. CONTACT YOUR LOCAL REPRESENTATIVE.

Forward

The CVX0260B is a CVK package with the ultimate air circuit for all of your material handling systems. The CVX0260B is ideal for non-porous applications that require fast response of large vacuum and blow-off release flow rates, Emergency Stop Management System, optional air-economizing features, and device net communication. The Emergency Stop Management System can operate a normally closed system during an emergency event or power failure situation. Typically, with a normally closed air circuit, the user controls the vacuum with a command signal. During an emergency event or power failure event, the vacuum command signal is lost, but, the system can detect the presence of a part and continue to operate in the vacuum mode. If the system detects that a part is not present, each vacuum channel, operating independently, will close to eliminate any unnecessary air consumption. Additional air economizing features are controlled by the sensor outputs to make this unit the ultimate weapon against air consumption.

There are 4 separate states of air logic: vacuum, blow-off, idle, and EOS. The air circuit in Figure 1 illustrates a basic normally closed unit with the Emergency Stop operating system. Vacuum is created when a high signal is sent to Vacuum Pilot Valve **(1)**. The output of the Vacuum Sensor **(2)**, controls the vacuum level and air economizing function by feedback to the Vacuum Solenoid Valve **(1)**. The Check Valve **(3)** maintains the vacuum level until the Blow-off Pilot Valve **(4)** is activated to release or the hysteresis value of Sensor **(2)** is reached to restore the original vacuum level. The Emergency Stop operating system **(5)** is activated by an emergency event or power failure.

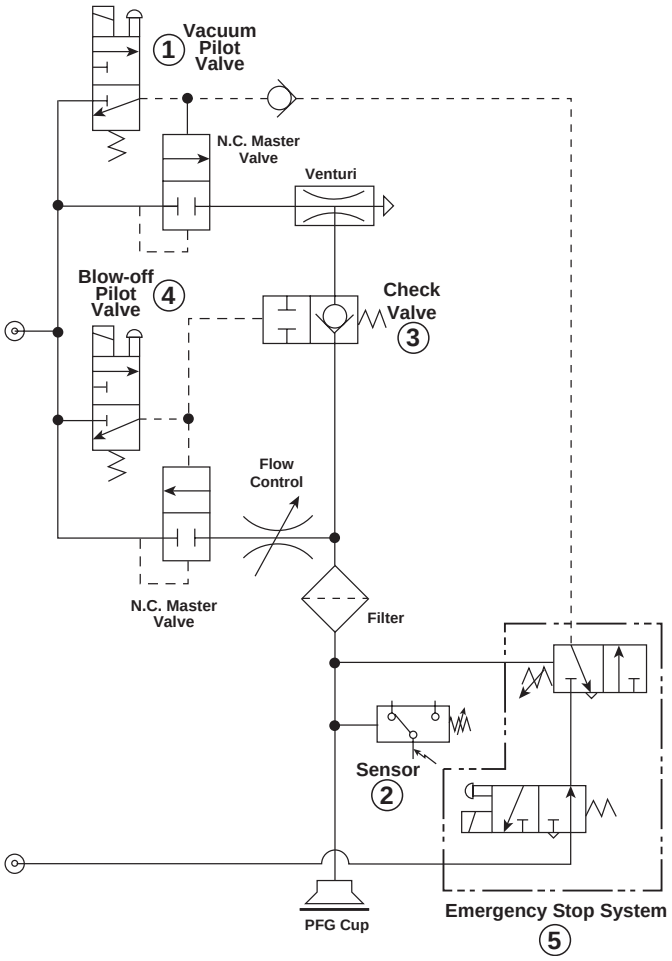

Figure 1

Specifications

CVX0260B Specifications

Media	Non-lubricated Dry Air
Pressure Port	3/8" G, 3/8" NPT Through Port
Vacuum Ports	2 Individual Vacuum Channels 3/8" G Ports or 3/8" NPT
Operating Temperature	32° to 122°F (0° to 50°C)
Humidity	35 to 85% R.H.
Operating Pressure	70 PSI
Vacuum Filtration	130 µm
Noise Level	72dB
Air Consumption	10.41 SCFM
Maximum Vacuum Level	-26.2 inHg

Control Valve Specifications

3-Way	Pilot Valves
Manual Operation	Manual Overrides Available
Electrical Connector	DIN type w/LED and Diode Protection, IP65 Rating
Power Supply	24VDC ± 10%
Power Consumption	1.8W
Pressure	70 PSI

Sensor Specifications

Media	Non-lubricated Dry Air
Operating Temperature	32° to 122°F (0° to 50°C)
Humidity	35 to 85% R.H.
Electrical Connection	4-Pin, M8 Connector
Power Supply	10.8 to 30 VDC, Ripple Vp-p 10% Max. Diode Protection
Display	3-Digit, 7-Segment LED
Units of Measure	inHg, mmHg, bar, kPa, Selectable
Display Resolution	kPa:1, bar: 0.01, mmHg: 1, inHg: 0.1 Selectable
2-Switch Outputs	Individually Selectable N.O or N.C., 80mA, 30V with Overcurrent Protection, LED Status
Operating Mode	Hysteresis Adjustable
Response Time	2ms
Repeatability	± 0.2% F.S.
General Protection	CE Rated
Current Consumption	<55mA

Emergency Stop Operating System Specifications

Two-Way Valve	Diaphragm Actuated, Pneumatic Output
Media	Non-lubricated Air, Dry Air
Operating Range	-4.5 to -25 inHg Vacuum
Pressure Operating Range	70 PSI
Accuracy	± 1.5 inHg
Port Connection	M5 Female
Air Supply	Normally Closed

Emergency Stop Electrical Valve Specifications

3-Way Valve	Direct Acting
Media	Air
Operating Range	70 PSI
Electrical Connection	DIN Connector w/LED and Diode Protection, IP65
Operating Voltage	24VDC ± 10%
Power Consumption	1.8W
Current	0.075A

Model Number Index

(Bold Items are Stocked)

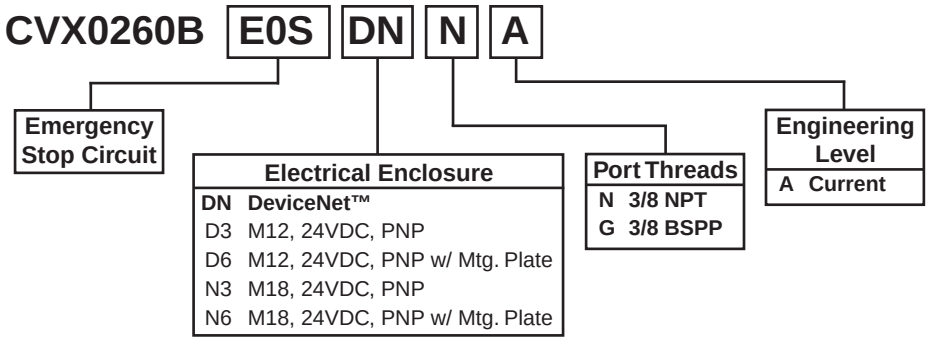

System Logic

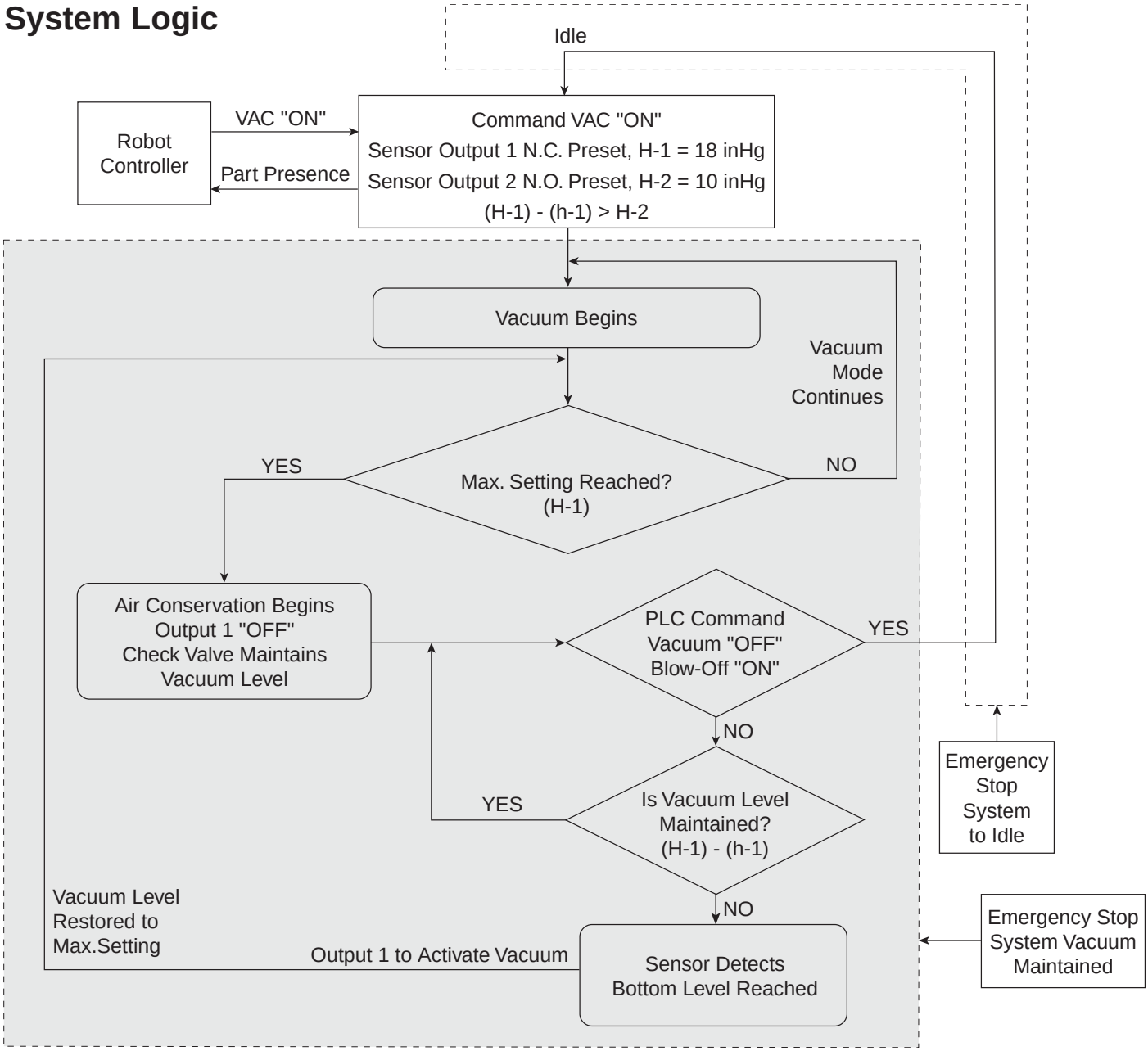

The above flow chart illustrates the basic operation of the vacuum system. Vacuum is created when the unit receives a command vacuum “ON”. The vacuum sensor output will turn off the vacuum solenoid and begin the Air Conservation Mode with the built-in check valve at the set vacuum and hysteresis levels. The unit will release the part by command blow-off “ON”. If an emergency event or power failure occurs any time the system is in the shaded area, vacuum will be maintained to hold the workpiece. If an emergency event or power failure occurs, any time the system operations are at idle or during blow-off “ON”, the system will remain or return to the idle state.

For Design A Units with MPS-2 Pressure Sensor

Sensors

The Convum MPS-2 sensor with display has two (2) individual switch outputs with hysteresis setting for feedback and controls.

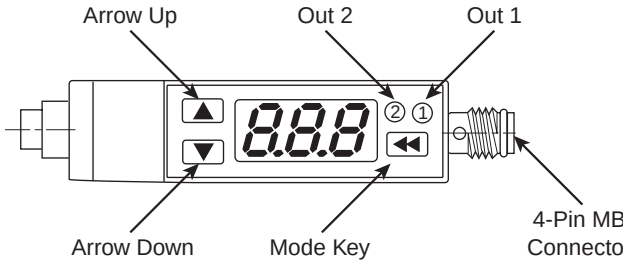

Factory Settings

OUT 1 AIR ECONOMIZING	OUT 2 PART PRESENCE
N.C. Below H-1, N.O. Above H-1	N.O. Below H-2, N.C. Above H-2
H-1, Switch Point 18 inHg	H-2, Switch Point 10 inHg
h-1, Hysteresis 2.5 inHg Hysteresis Mode	h-2, Hysteresis 0.5 inHg Hysteresis Mode
Units of Measure; inHg	
Easy Mode; On	

The sensor has an “easy-mode” setting that is activated before leaving the factory. This limits any sensor adjustments to Output 1 and Output 2 switch points only and minimizes any accidental changes to the factory settings. **AIR ECONOMIZING SWITCH POINT IS FACTORY SET AT 18 inHg. ALL SYSTEM DESIGN PARAMETERS MUST BE ANALYZED BEFORE CHANGING “H-1”**. Air Economizing function will be turned off by setting “H-1” above the maximum vacuum pressure that the system can create.

It may be necessary to adjust the part presence Output 2 to avoid false signals when vacuum is falsely created by tubing or fitting flow restrictions in an open system. Press the mode key one (1) time and “H-1” and “18” will alternate on the display. Bypass “H-1” by pressing the mode key and “H-2” and “10” will alternate on the display. Press the arrow up key to adjust the switch point above the vacuum level measured with the system open. To enter and store this change, press the mode key and the word “End” will appear.

Output 2 part presence signal is in a non-passing state above H-2. If PLC system design requires a signal above H-2, change H-2 from N.O. to N.C. Press Mode Key and Up Arrow Button. “ou1” is displayed. Press Mode Key one time. “ou2” is displayed. Press Up Arrow Button to change “ou2” from N.O. to N.C. Press Mode Key 2 times to save.

Emergency or Power Failure Operating System (EOS)

(Patent Pending)

The Emergency Operating System is designed to maintain and continue the current operation mode of the vacuum generator when an emergency or power failure occurs by an adjustable or fixed vacuum level on the mechanical pressure sensor.

Blow-off Adjustment

The volume of air during the blow-off function to release the workpiece can be set by turning the needle adjustment up or down. Access the needle adjustment through opening of protective cover (topside).

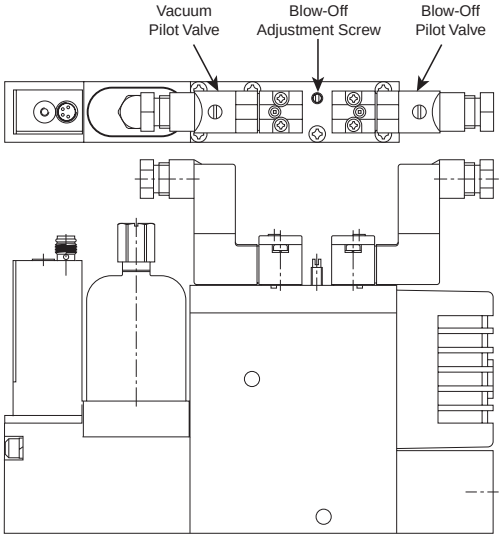

Air Economizing and Vacuum Level Control

The vacuum sensor Output 1 is configured normally closed and turns off the vacuum pilot valve. This controlled vacuum level is programmed on the sensor by adjusting “H-1” or Output 1. When the desired vacuum level is reached, the system begins the air-economizing function by closing the vacuum valve air supply and allowing the internal check valve to maintain the vacuum level until the blow-off solenoid valve is activated to release the part or the hysteresis value (programmed “h-1”) of Output 1 is reached to restore the vacuum to the original desired level.

Operation Mode

MODES	VACUUM ON	VACUUM OFF	BLOW-OFF	EOS
Normal Conditions	Air Economizing between 18-15.5 inHg	Idle	Blow-off On Blow-off Idle	EOS Off
Emergency or Power Failure	Vacuum On ↓ ↓ Vacuum On	Idle	Blow-off On Idle ↓ ↓ Idle Idle	EOS On
Restore Power	Vacuum On Air Economizing Function Resumes	Idle	Idle	EOS Off

For Design A Units with MPS-23 Pressure Sensor

Sensors

The Convum MPS-23 sensor with display has two (2) individual switch outputs with hysteresis setting for feedback and controls.

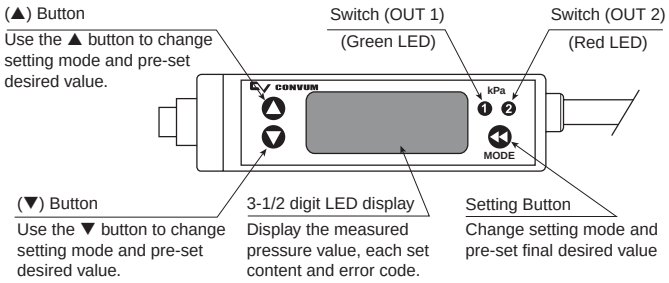

Factory Settings

OUT 1 AIR ECONOMIZING	OUT 2 PART PRESENCE
N.C. Below n_1, N.O. Above n_1	N.O. Below P_3, N.C. Above P_3
n_1, Switch Point 18 inHg	P_3, Switch Point 10 inHg
n_2, Hysteresis 15.5 inHg Hysteresis Mode	P_4, Hysteresis 9.5 inHg Hysteresis Mode
Units of Measure; inHg	

Sensor settings must be set so that n_1 > n_2 and P_3 > P_4.

AIR ECONOMIZING SWITCH POINT IS FACTORY SET AT 18 inHg. ALL SYSTEM DESIGN PARAMETERS MUST BE ANALYZED BEFORE CHANGING "n_1". Air Economizing function will be turned off by setting "n_1" above the maximum vacuum pressure that the system can create.

It may be necessary to adjust the part presence Output 2 to avoid false signals when vacuum is falsely created by tubing or fitting flow restrictions in an open system.

Emergency or Power Failure Operating System (EOS)

(Patent Pending)

The Emergency Operating System is designed to maintain and continue the current operation mode of the vacuum generator when an emergency or power failure occurs by an adjustable or fixed vacuum level on the mechanical pressure sensor.

Blow-off Adjustment

The volume of air during the blow-off function to release the workpiece can be set by turning the needle adjustment up or down. Access the needle adjustment through opening of protective cover (topside).

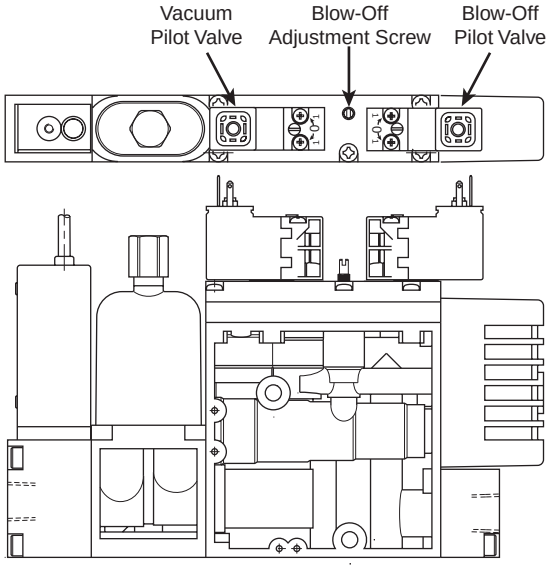

Air Economizing and Vacuum Level Control

The vacuum sensor Output 1 is configured normally closed and turns off the vacuum pilot valve. This controlled vacuum level is programmed on the sensor by adjusting "n_1" or Output 1. When the desired vacuum level is reached, the system begins the air-economizing function by closing the vacuum valve air supply and allowing the internal check valve to maintain the vacuum level until the blow-off solenoid valve is activated to release the part or the hysteresis value (programmed "n_2") of Output 1 is reached to restore the vacuum to the original desired level.

Operation Mode

MODES	VACUUM ON	VACUUM OFF	BLOW-OFF	EOS
Normal Conditions	Air Economizing between 18-15.5 inHg	Idle	Blow-off On Blow-off Idle	EOS Off
Emergency or Power Failure	Vacuum On ↓ ↓ Vacuum On	Idle	Blow-off On Idle ↓ ↓ Idle Idle	EOS On
Restore Power	Vacuum On Air Economizing Function Resumes	Idle	Idle	EOS Off

Replacement Components

Item	Part Number	Description
1	CVK-S	Silencer
2 thru 7	CVK-F	Filter Kit
5	CVK-E	Filter Element
8	PESC2020B	DIN Connector
8, 9, 10	P5136-M6L-DC24V	Pilot Valve Kit
11	3PB119-00-L-3	Auxiliary Valve
12	CVM99821	Diaphragm Valve
13	ENC244	Cover (Not Shown)
14	PSCVXDNA PSCVXD3A PSCVXN3A	DeviceNet M12 Discrete 18-Pin Discrete
15	MPS-V2C-NC*	NPN Sensor

*No longer available. Must use MPS-V23C-NC.

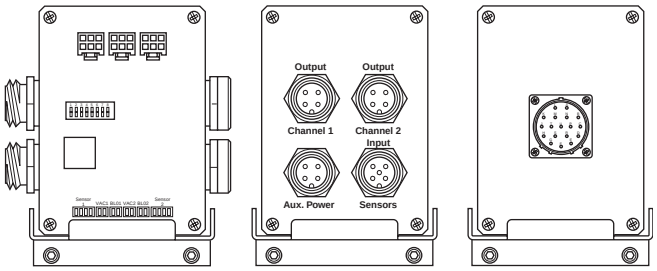

PSCVXDNA PSCVXD3A PSCVXN3A

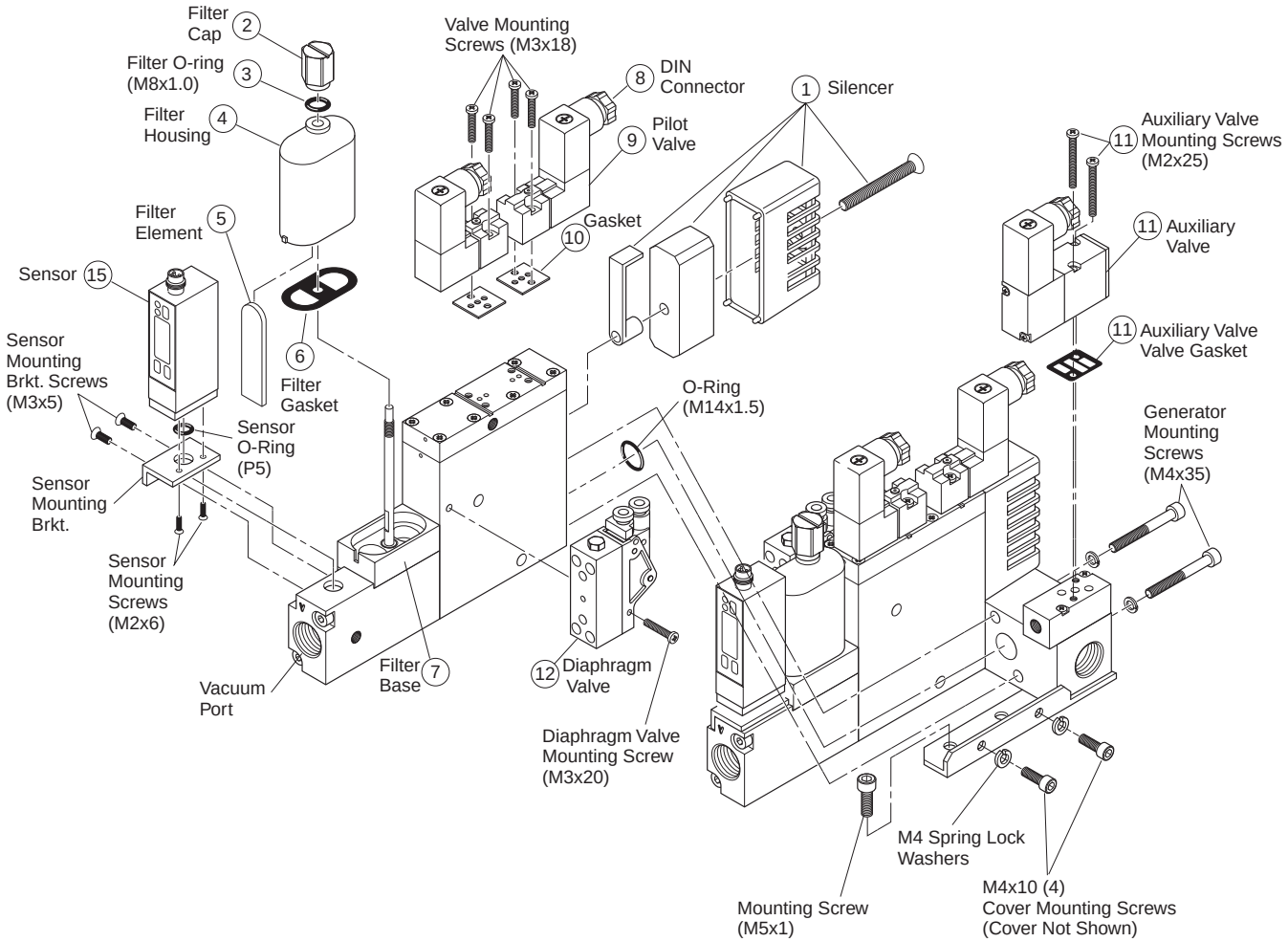

Scheduled Maintenance

Filters – Periodic maintenance of the secondary vacuum filter is necessary. The frequency of maintenance depends on the environment and application. As the filter collects product from the environment the maximum vacuum level potential and response time may vary.

Silencer – Periodic maintenance of the silencer may be required. The frequency of maintenance depends on the environment and condition of the air supply.

Contents

The CVX0260B is supplied with four (4) M5 x 1 Socket Head Cap Screws to secure the unit to the optional mounting plate.

CVX0260BE0SDN**

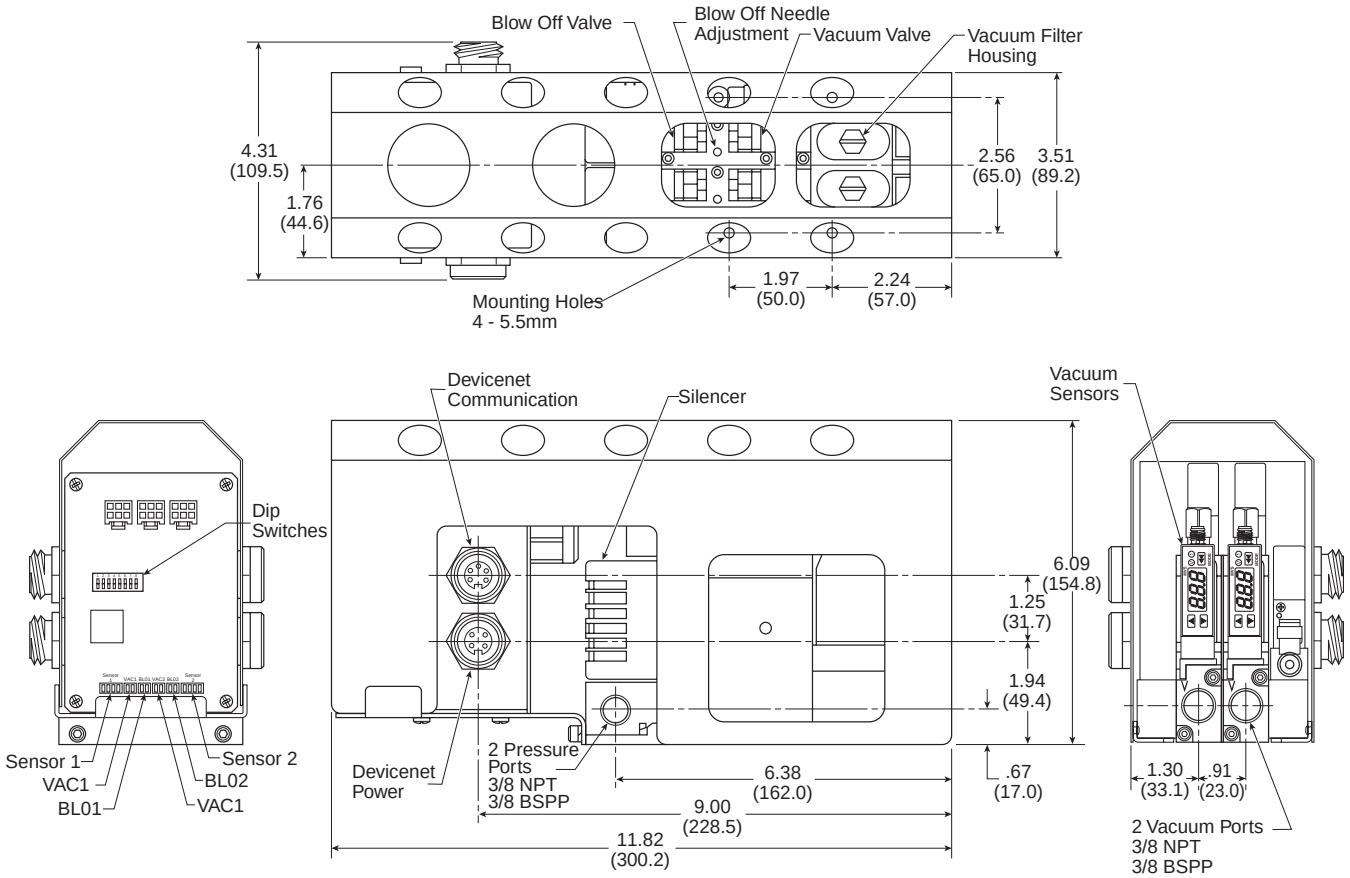

DeviceNet Kit PSCVXDNA

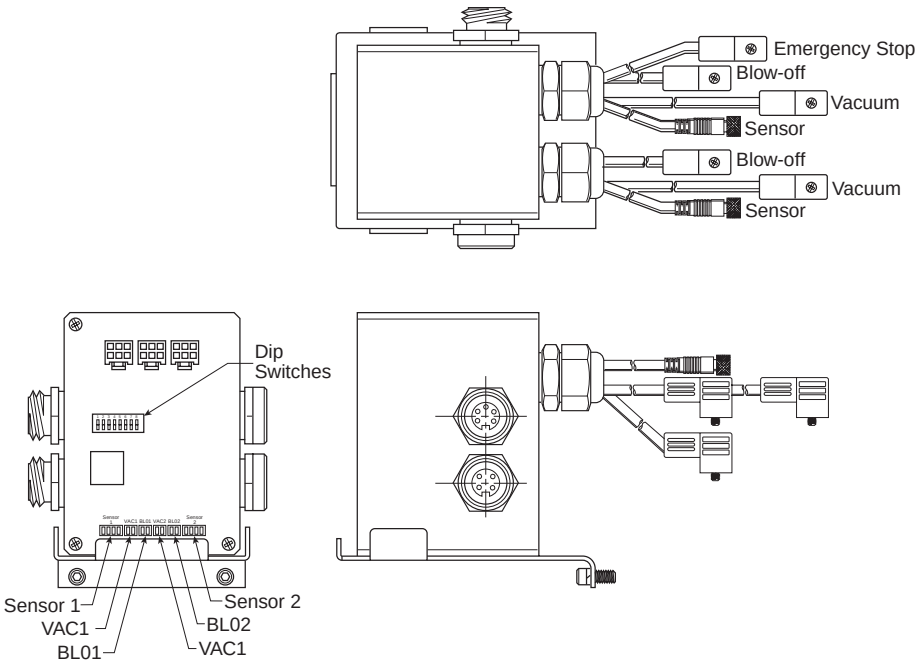

DeviceNet™

The DeviceNet™ power bus supplies power for the DeviceNet circuitry and the two sensors. The auxiliary power bus provides power for the vacuum solenoids and blow-off solenoids. *No external PLC programming is required for Air Economizing Functions because this function is built into the electrical unit.* The following are power requirements for the DeviceNet circuitry. Voltage Range: 12.5 to 24VDC; Current 150 mA.

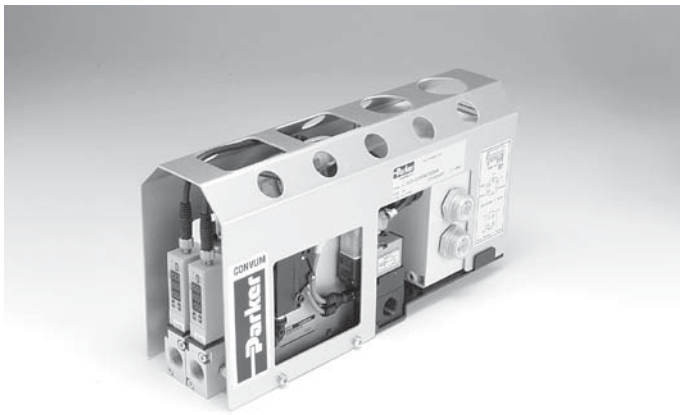

DeviceNet™ Bus Connectors
5-Pin Mini-Style

DeviceNet Connections

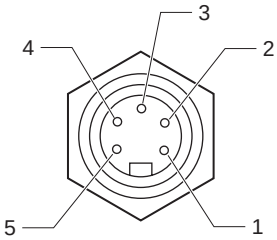

Male (Pins)

1.) Drain
2.) V+
3.) V-
4.) CAN-H
5.) CAN-L

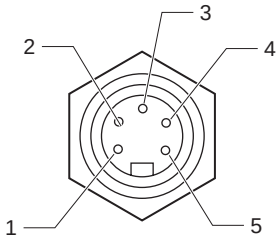

Female (Sockets)

24VDC Power Connections

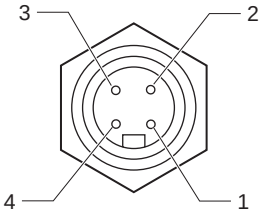

Male (Pins)

1.) 24VDC
2.) Not Used
3.) Not Used
4.) Common

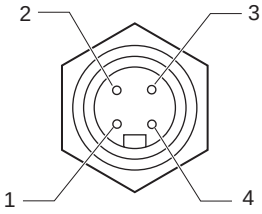

Female (Sockets)

I/O Data Table

Input Data Table

	Bit							
	0	1	2	3	4	5	6	7
Input Byte 1	CH1 Part Presence	CH2 Part Presence	Not Used	Not Used	Not Used	Not Used	Not Used	Not Used

Output Data Table

	Bit							
	0	1	2	3	4	5	6	7
Input Byte 1	CH1 Vacuum	CH1 Blow-Off	CH2 Vacuum	CH2 Blow-Off	Not Used	Not Used	Not Used	Not Used

DeviceNet™ Information

General Description

The Convum Vacuum Generator operates as a Group II Only slave on the DeviceNet™ network. The unit supports the following types of messaging: Explicit, Polled, Cyclic, Change of State, and Bit Strode. It does not support the Explicit Unconnected Message Manager (UCMM).

The Cyclic, Change of State, and Bit Strobe types of messaging were incorporated into the product beginning with Firmware Revision No 4.23 or later. This can be verified by the label on the microcontroller on the p.c. board.

The unit has four (4) digital outputs and two (2) digital inputs. The digital outputs control two (2) vacuum states and two (2) blow-off states. The two (2) digital inputs are two-part present indications (one for each channel) and an auxiliary power voltage indicator.

The DeviceNet™ power bus supplies power for the DeviceNet™ circuitry and the two (2) Convum sensors. The auxiliary power bus provides power for the vacuum solenoids, the blow-off solenoids, and the solenoid for the Emergency Stop circuit. The following are the power requirements for the DeviceNet™ circuitry.

Voltage Range . 12.5 to 24VDC

Current.....150Ma

The following is the product information for the DeviceNet™ interface:

Vendor ID (VendCode) 510

Device Type (ProdType).....7

Product Code (ProdCode).....1

Bytes Produced (polled).....1

Bytes Consumed (polled).....1

The following are the power requirements for the circuitry on the auxiliary power bus:

Voltage Range..... 24VDC

Current..... 400Ma max.

MAC ID Settings

The MAC ID is set with the lowest six (6) positions on the 8-Pin DIP switch located on the p.c. board. The least significant digit of the setting is on position 1 and the most significant digit is on position 6. To have a switch be read as a “1”, set it to the “ON” position. To have the switch be read as a “0”, set it to the “OFF” position.

Baud Rate Settings

The baud rate is set with the two highest positions on the 8-Pin DIP switch. The lower digit is position 7 and the higher digit is position 8. To have a switch be read as a “1”, set it to the “ON” position. To have the switch be read as a “0”, set it to the “OFF” position. The following are the DIP switch settings for the baud rate:

Switch Settings (7 and 8)	Baud Rate
00	125k
01	250k*
10	500k
11	Invalid

* Factory Preset 250k

Poll Command and Digital Outputs

The unit has four (4) outputs. The outputs are bitmapped to the lower nibble of the byte. The outputs are turned ON by sending a “1” to their respective bits, and they are turned OFF by sending a “0” to their respective bits. The following are the polled data bytes to actuate the four outputs:

Polled Command Date	Action
0x01	Turns ON Channel 1 Vacuum
0x02	Turns ON Channel 1 Blow-off
0x04	Turns ON Channel 2 Vacuum
0x08	Turns ON Channel 2 Blow-off

Poll Response and Digital Inputs

Inputs indicate that a part is present on either of the two (2) channels. The inputs are bit mapped to the lower nibble of the byte in the polled response. The following are the feedback signal meanings for the two (2) inputs:

Polled Response Date	Interpretation
0x01	Channel 1, Part Present
0x02	Channel 2, Part Present

Explicit Messaging and Digital Outputs

The outputs are accessed through the Discrete Output Point Object, Class Code 0x09.

Output	Instance No.	Attribute
Vacuum 1	1	3
Blow-off 1	2	3
Vacuum 2	3	3
Blow-off 2	4	3

Explicit Messaging and Digital Inputs

The inputs are also accessed through the Discrete Input Object, Class Code 0x08, with Explicit messaging.

Input	Instance No.	Attribute	Explicit Response
Channel 1, Part Present	1	3	0x01
Channel 2, Part Present	2	3	0x01

Change of State Messaging

In this mode of messaging, date is sent to the Master when the Slave device inputs change. These device inputs are the two-part present indications. Change of State messaging can send acknowledged or unacknowledged date.

For acknowledged date, the Acknowledge Timer in the Acknowledge Handler Object (Class Code 0x2B, Attribute 1) sets the time to wait before resending the data. The range of values for this attribute is 1 to 65,635ms. Zero is invalid. The default value is 16ms.

A Slave can be allocated for Cyclic or Change of State but not both. Change of State can function with Bit-Strobed and Polled messaging.

Cyclic Messaging

In this mode of messaging, the data from the Slave device inputs is sent back to the master at a pre-configured periodic time interval. These Slave device inputs are the two-part present indications and the auxiliary power indication. The Cyclic messaging also can be acknowledged or unacknowledged.

The period of the messaging interval is controlled by the expected packet rate (EPR) which can be adjusted in millisecond increments.

Bit-Strobe Messaging

A master sends a Bit-Strobe command to each Slave whose MAC ID is on the Master's Scan List In the command there is one bit of output data for each Slave; therefore, the command is 64 bits or 8 bytes long.

To the master, each Slave returns a Bit-Strobe response which can contain up to 8 bytes of input data and / or status information. The format of the Bit-Strobe response for the Convum / Parker DeviceNet™ is the same as the Poll response.

Factory DIP Switch Settings

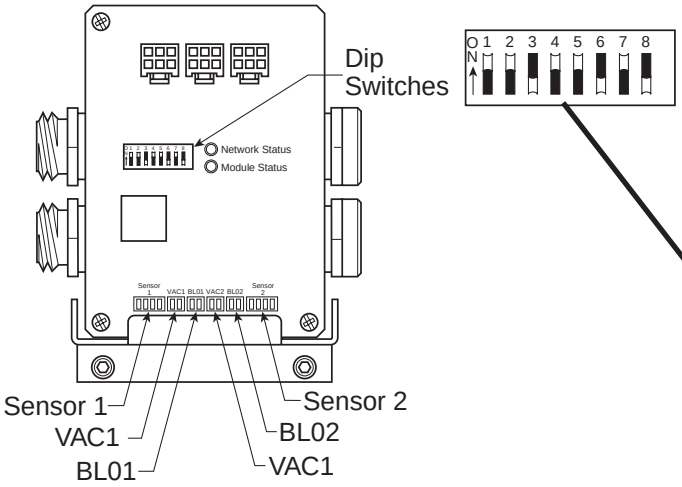

Module Status Lights (LEDs)

Indicator	Function	
Network Status	Off	No power applied to module or module not on-line
	Steady Green	Normal Operation: on-line and established connection(s)
	Flashing Green	Device on-line, waiting for scanner to establish connection
	Steady Red	Failed communication: duplicate address or bus-off
	Flashing Red	One or more I/O connections are in the Timed-out state or output fault
Module Status	Off	No power applied to module at bus or power connector
	Steady Green	Normal Operation
	Flashing Red	Low or No Bus Power (VDC+)

DeviceNet™ MAC ID	# 1	# 2	# 3	# 4	# 5	# 6
0	OFF	OFF	OFF	OFF	OFF	OFF
1	ON	OFF	OFF	OFF	OFF	OFF
2	OFF	ON	OFF	OFF	OFF	OFF
3	ON	ON	OFF	OFF	OFF	OFF
4	OFF	OFF	ON	OFF	OFF	OFF
5	ON	OFF	ON	OFF	OFF	OFF
6	OFF	ON	ON	OFF	OFF	OFF
7	ON	ON	ON	OFF	OFF	OFF
8	OFF	OFF	OFF	ON	OFF	OFF
9	ON	OFF	OFF	ON	OFF	OFF
10	OFF	ON	OFF	ON	OFF	OFF
11	ON	ON	OFF	ON	OFF	OFF
12	OFF	OFF	ON	ON	OFF	OFF
13	ON	OFF	ON	ON	OFF	OFF
14	OFF	ON	ON	ON	OFF	OFF
15	ON	ON	ON	ON	OFF	OFF
16	OFF	OFF	OFF	OFF	ON	OFF
17	ON	OFF	OFF	OFF	ON	OFF
18	OFF	ON	OFF	OFF	ON	OFF
19	ON	ON	OFF	OFF	ON	OFF
20	OFF	OFF	ON	OFF	ON	OFF
21	ON	OFF	ON	OFF	ON	OFF
22	OFF	ON	ON	OFF	ON	OFF
23	ON	ON	ON	OFF	ON	OFF
24	OFF	OFF	OFF	ON	ON	OFF
25	ON	OFF	OFF	ON	ON	OFF
26	OFF	ON	OFF	ON	ON	OFF
27	ON	ON	OFF	ON	ON	OFF
28	OFF	OFF	ON	ON	ON	OFF
29	ON	OFF	ON	ON	ON	OFF
30	OFF	ON	ON	ON	ON	OFF
31	ON	ON	ON	ON	ON	OFF
32	OFF	OFF	OFF	OFF	OFF	ON
33	ON	OFF	OFF	OFF	OFF	ON
34	OFF	ON	OFF	OFF	OFF	ON
35	ON	ON	OFF	OFF	OFF	ON
36*	**OFF**	**OFF**	**ON**	**OFF**	**OFF**	**ON**
37	ON	OFF	ON	OFF	OFF	ON
38	OFF	ON	ON	OFF	OFF	ON
39	ON	ON	ON	OFF	OFF	ON
40	OFF	OFF	OFF	ON	OFF	ON
41	ON	OFF	OFF	ON	OFF	ON
42	OFF	ON	OFF	ON	OFF	ON
43	ON	ON	OFF	ON	OFF	ON
44	OFF	OFF	ON	ON	OFF	ON
45	ON	OFF	ON	ON	OFF	ON
46	OFF	ON	ON	ON	OFF	ON
47	ON	ON	ON	ON	OFF	ON
48	OFF	OFF	OFF	OFF	ON	ON
49	ON	OFF	OFF	OFF	ON	ON
50	OFF	ON	OFF	OFF	ON	ON
51	ON	ON	OFF	OFF	ON	ON
52	OFF	OFF	ON	OFF	ON	ON
53	ON	OFF	ON	OFF	ON	ON
54	OFF	ON	ON	OFF	ON	ON
55	ON	ON	ON	OFF	ON	ON
56	OFF	OFF	OFF	ON	ON	ON
57	ON	OFF	OFF	ON	ON	ON
58	OFF	ON	OFF	ON	ON	ON
59	ON	ON	OFF	ON	ON	ON
60	OFF	OFF	ON	ON	ON	ON
61	ON	OFF	ON	ON	ON	ON
62	OFF	ON	ON	ON	ON	ON
63	ON	ON	ON	ON	ON	ON

* Factory Preset

CVX0260BE0S***A

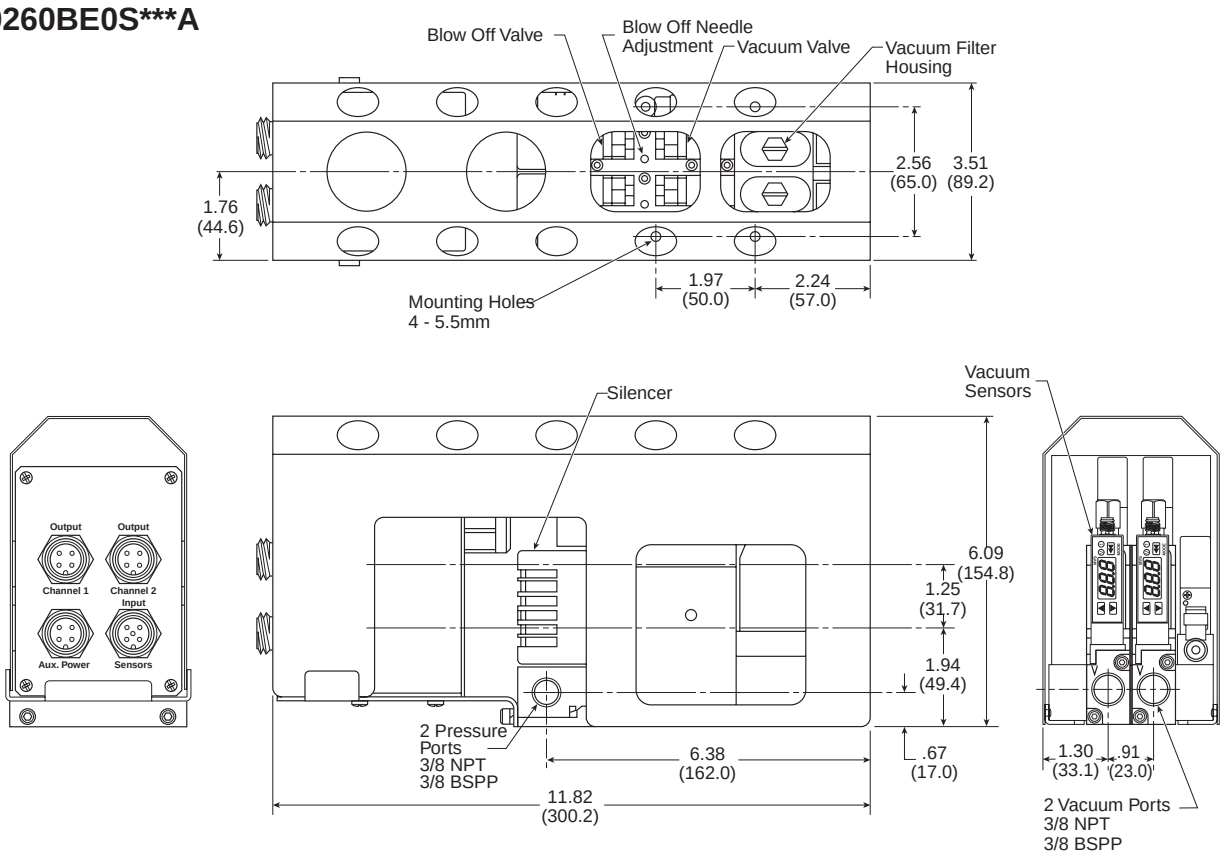

Optional Mounting Plate

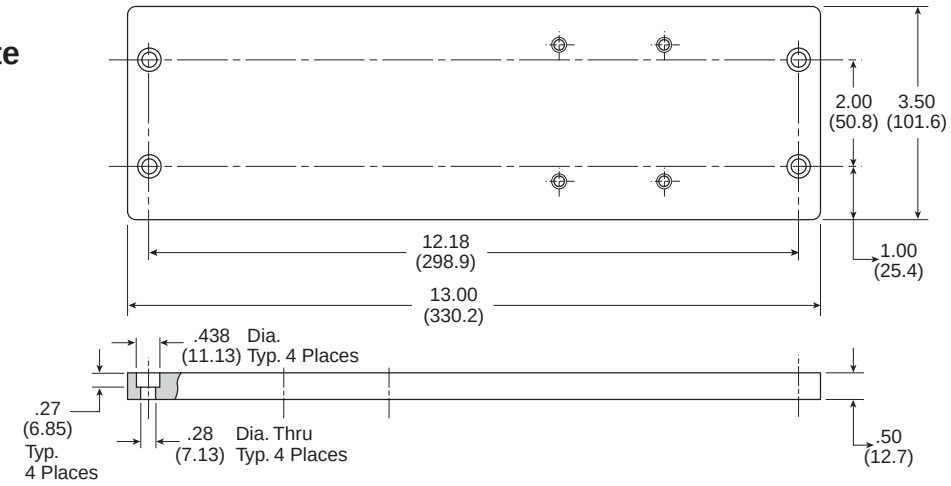

Discrete Kits
PSCVXD3A - M12, 24VDC
PSCVXN3A - M18, 24VDC

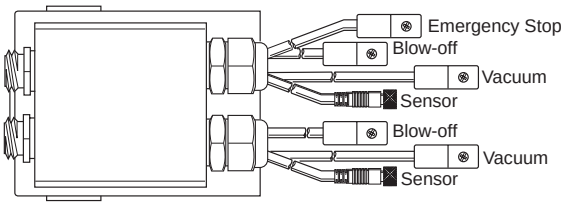

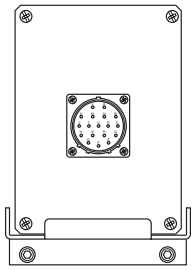

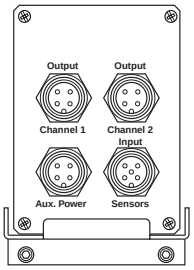

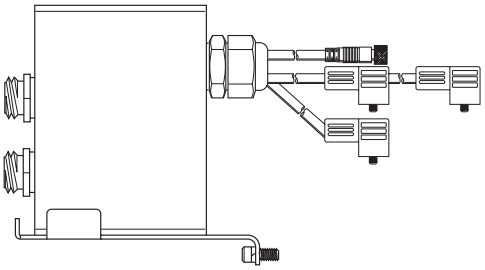

Discrete Units

The Discrete units provide M12 or M18 connectors for ease of installation. The circuit includes the Air Economizing Function and PNP (Sourcing) Outputs. *No external PLC programming is required for Air Economizing Functions because this function is built into the electrical unit.* The following are the Pin Outs for these Discrete units.

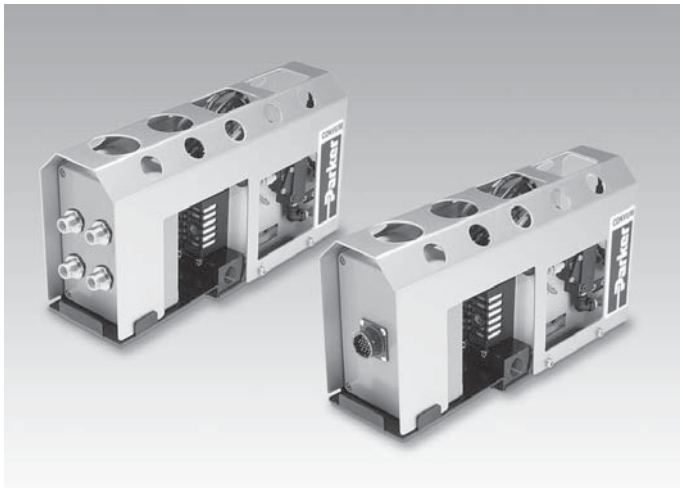

M12, 24VDC

Output - 4-Pin, M12, Keyed Male
Input - 5-Pin, M12, Keyed Male
Aux. Power - 4-Pin, M12, Keyed Male

Output

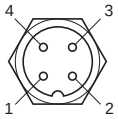

Channel 1

1 Not Used (Brown)
2 Out CH1 Blow Off (White)
3 Common (Blue)
4 Out CH1 VAC (Black)

Output

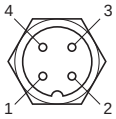

Channel 2

1 Not Used (Brown)
2 Out CH2 Blow Off (White)
3 Common (Blue)
4 Out CH2 VAC (Black)

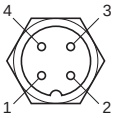

Aux. Power

1 Not Used (Brown)
2 Not Used (White)
3 Auxilary Power Common (Blue)
4 Power (Black)

Input

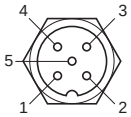

Sensors

1 Power (Brown)
2 CH2 Part Presence (White)
3 Common (Blue)
4 CH1 Part Presence (Black)
5 Not Used (Gray)

M18, 24VDC

18-Pin Connector

24VDC

A	CH2 Blow Off
B	CH2 Sensor Power
C	CH2 Part Presence
D	CH2 VAC Control
E	CH1 Blow Off
F	CH1 Sensor Power
G	CH1 Part Presence
H	CH1 VAC Control
J	DC Voltage Monitor
K	Common
L	Ground
M	Not Used
N	Not Used
P	Output Power
R	Not Used
S	Not Used
T	Not Used
U	Not Used

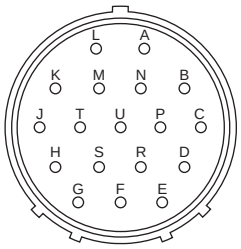

Face View - Male 18-Pin Connector

Notes: Pin B & F are jumpered inside unit.
Either pin can connect power to both sensors.

Pin P & J are jumpered inside unit.
This is for monitoring power only. Pin P is not necessary for operation of the unit.

For Design A Units with MPS-2 Pressure Sensor

MPS-2 Sensor Programming Features

See page 16 for Symbol Explanation

1 Hold ◄◄ Press ▲ 1x

Output Set Open or Closed Selecting Units of Measure

Easy Mode Activation

ou1 ⇄ no ▲▼ nc

ou2 ⇄ no ▲▼ nc

-PA ▲ -bA ▲ -H9 ▲ -iH

PA ▲ bA ▲ F9 ▲ PS

ESY ⇄ oFF ▲▼ on

---

2 Press ◄◄ 2x

Output Mode 1 Hysteresis or Window Comparator

ou1 ⇄ HYS ▲ CnP ▲ oFF

End

3 Press ◄◄ 4x

Output Mode 2 Hysteresis or Window Comparator

ou2 ⇄ HYS ▲ CnP ▲ oFF

End

4 Press ◄◄ 1x

Output 1 Setting Hysteresis Mode

H-1 ⇄ 70 ▲▼ 145 / 0

h-1 ⇄ 13 ▲▼ 145 / 0

Window Comparator Mode

Low

A-1 ⇄ 42 ▲▼ 144 / 0

High

b-1 ⇄ 71 ▲▼ 145 / 1

End

5 Press ◄◄ 3x

Output 2 Setting Hysteresis Mode

H-2 ⇄ 97 ▲▼ 145 / 0

h-2 ⇄ 13 ▲▼ 145 / 0

Window Comparator Mode

Low

A-2 ⇄ 85 ▲▼ 144 / 0

High

b-2 ⇄ 113 ▲▼ 145 / 1

End

6 Press ◄◄ 5x

Automatic Teach Mode & Auto Surveillance

AUt

Vacuum Cycle 803

Release Cycle 0

AL ⇄ on ▲ oFF

ALn ⇄ 1 ▲▼ 100 / 1

End

7 Press ◄◄ 6x

Display Refresh Settings / Output Response Time Interval

dSP ⇄ 0.1 ▲▼ 3.0 / 0.1

AuE ⇄ 1 ▲ 16 ▲ 64 ▲ 512

End

8 Press ◄◄ 7x

Display Peak Value Bottom Value or Their Difference

Pb ⇄ oFF ▲ on

Pbt ⇄ 10 ▲▼ 99 / 2

Pbd ⇄ PE ▲ bo ▲ du

End

9 Press ◄◄ 8x

Special Display Features

dSF ⇄ oFF ▲▼ on

Fnc ⇄ 1b ▲ 1d ▲ 2b ▲ 2d ▲ oFF ▲ AL

End

10 Hold ◄◄ Press ▼

Loc

Lock

Hold ◄◄ Press ▼

UnC

Unlock

11 Press ▲ 1x

PE

Peak Value

Press ▼ 1x

bo

Bottom Value

12 Press ◄◄ for 3 Seconds

Zero Reset

0

For Design A Units with MPS-23 Pressure Sensor

Programming Features MPS-23 1-Color Generator Mount

Initial setting mode

1. Unit setting

Press ◀◀ button for more than 3 seconds.

Model: MPS-V23

PA ⇄ GF ⇄ bAr ⇄ PSI ⇄ inH ⇄ mmH ⇄ H2o

MpA, kgf/cm², bar, psi, inHg *, mmHg, mmH₂O

Use the ▲ or ▼ button to set desired pressure unit.

2. Out 1 mode setting (1x)

1no ⇄ 1nC

NO Mode; NC Mode *

Use the ▲ or ▼ button to set OUT1 mode.

Output Type:
NO: Normal open mode
NC: Normal closed mode

3. Out 2 mode setting (1x)

2no ⇄ 2nC

NO Mode *; NC Mode

Use the ▲ or ▼ button to set OUT1 mode.

Output Type:
NO: Normal open mode
NC: Normal closed mode

4. Response time setting (1x)

2.5 ⇄ 24 ⇄ 192 ⇄ 768

2.5ms *, 24ms, 192ms, 768ms

Use the ▲ or ▼ button to select response time.

5. Pressure value setting: auto / manual (1x)

nAn ⇄ AUt

Manual Setting Mode *; Auto Setting Mode

Use the ▲ or ▼ button to select auto / manual.

Measure mode (1x)

*Factory Setting

Zero point setting / the max. & min. display mode

Zero setting:

press the▼▲ button at the same time until the “00” is shown. Release the button to end zero setting.

The max. value display mode:

Press ▲ button 2 seconds to enter the max. value mode, pressure sensor will detect the max. value and keep max. value displayed.

Press ▲ button 2 seconds to return to measure mode display.

The min. value display mode:

Press ▼ button 2 seconds to enter the min. value mode, pressure sensor will detect the min. value and keep min. value displayed.

Press ▼ button 2 seconds to return to measure mode display.

Key lock / unlock mode

Key lock / unlock mode

Press ◀◀ button for less than 5 seconds.

Unl ⇄ LoC

Unlock Mode *; Lock Mode

Use the ▲ or ▼ button to select Lock / Unlock Mode.

Measure mode (1x)

- Key lock mode can prevent operation mistakes.

*Factory Setting

For Design A Units with MPS-23 Pressure Sensor

Programming Features MPS-23 1-Color Generator Mount

Output type

Hysteresis Mode P1 (n1) > P2 (n2) P3 (n3) > P4 (n4)

Output Hysteresis value can be preset.

Normal open mode

Vacuum (MPS-V23)

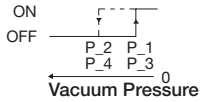

Normal close mode

Vacuum (MPS-V23)

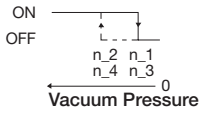

(Note)
When hysteresis mode setting is within 2 digits, if the input and pre-set pressure is quite near, pressure sensor output might cause chattering.

Window comparator Mode P1 (n1) < P2 (n2) P3 (n3) < P4 (n4)

Within pressure setting range, pressure sensor output can be ON or OFF.

Normal open mode

Vacuum (MPS-V23)

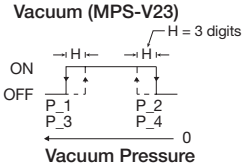

Normal close mode

Vacuum (MPS-V23)

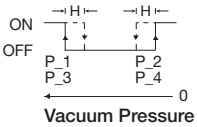

Do not use on CVX Units

Manual setting mode

The LED shows: (P_* at normal open mode and (n_*) at normal close mode. Pressure setting value is shown normally and will not lead to pressure sensor pause or stop working.

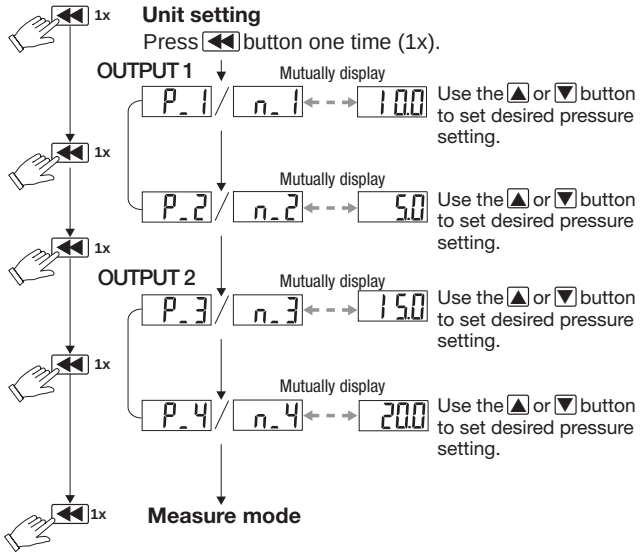

Auto setting mode
(Do not use on CVX Units)

*1. In case of without need of OUT1 pressure value setting, press ▼+▲ at the same time to enter (AP2) / (An2).
*2. In case of without need of OUT2 pressure value setting, press ▼+▲ at the same time to enter measure mode.
3. The LED shows (AP) at normal open mode and (An*) at normal closed mode.

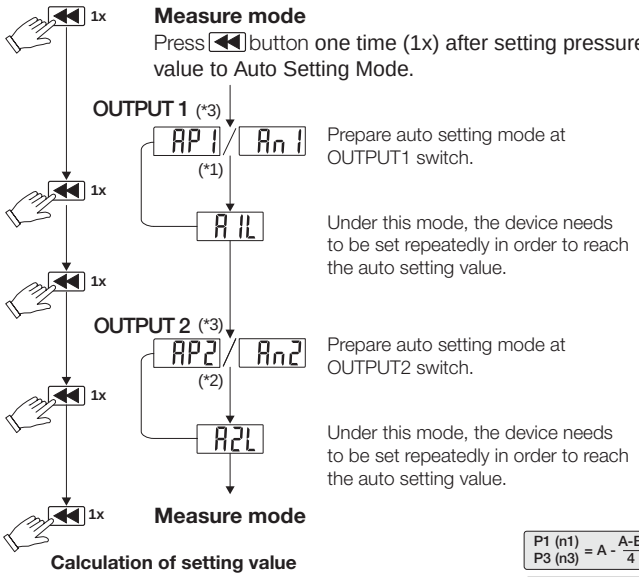

Calculation of setting value

A = The max. pressure value under auto setting mode.
B = The min. pressure value under auto setting mode.

$$\text{P1 (n1) / P3 (n3)} = A - \frac{A-B}{4}$$

$$\text{P2 (n2) / P4 (n4)} = B - \frac{A-B}{4}$$

Error messages

Error name		Display	Description	Solutions
Excess load current error	OUT1	*Er1*	Excess load current of 80 mA	Turn off power and check the cause of overload current or lower the current load under 80 mA, then restart
	OUT2	*Er2*		
Residual pressure error		*Er3*	During zero reset, ambient pressure is over ±3% F.S.	Change input pressure to ambient pressure and perform zero reset again
Applied pressure error		– – –	The applied pressure is excess the upper limit of pressure setting	Adjust the pressure within applied pressure range
		– – – –	The applied pressure is excess the lower limit of pressure setting	
System Error		*Er4*	Internal data error	Turn power off and then restart. If error condition remains, please return to factory for inspection
		Er6	Internal system error	
		Er7	Internal data error	

Programming Symbols Legend

ou1	Output 1
ou2	Output 2
ou3	Output 3
ou4	Output 4
nc	Output Normally Closed (Passing)
no	Output Normally Open (Non-Passing)
-PA / PA	Pressure Units (Pascal). Negative Units for Vacuum Sensors
-bA / bA	Pressure Units (Bar). Negative Units for Vacuum Sensors
-H9 / H9	Pressure Units (mm.Hg). Negative Units for Vacuum Sensors
-.iH	Pressure Units (in.Hg). Negative Units for Vacuum Sensors
-F9 / F9	Pressure Units (kgf/cm^2). Negative Units for Vacuum Sensors
PS	Pressure Units (PSI)
ESY	Easy Mode. Sensor will only allow changes to set points
oFF	Off, or Energy Saving Display; reduces current consumption of Sensor
on	On
HYS	Hysteresis Mode. Select Hysteresis Set Point and Hysteresis Range
CnP	Windows Comparative Mode Select High and Low Set Point
H-1	Hysteresis Mode Set Point. Output 1
H-2	Hysteresis Mode Set Point. Output 2
h-1	Hysteresis Mode. Hysteresis Range Output 1
h-2	Hysteresis Mode. Hysteresis Range Output 2
A-1	Windows Comparative Mode Low Set Point Output 1
b-1	Windows Comparative Mode High Set Point Output 1
A-2	Windows Comparative Mode Low Set Point Output 2
b-2	Windows Comparative Mode High Set Point Output 2
AUt	Automatic Teach Mode. Automatically sets Outputs 1 and 2 while cycling system. Output 1 set to Hysteresis Mode, Output 2 set to Window Comparative Mode
AL	Auto Surveillance Mode On/Off. Set after Automatic Teach
ALn	Auto Surveillance based on cycles times. Provides output if Peak Value is not obtained in a specified number of cycles. (1-100)
dSP	Display Refresh Setting. Display updates from .1 to 1 sec. .3 sec factory set. Does not affect Sensor Response Time
AuE	Output Response Time. Multiples the sensor response time. Increases sensor response time. (Anti-chatter Mode)
Pb	Pressure Value Display Mode. Displays Pressure for a specific time period and then updates for next time period
Pbt	Time Range for Pressure Value Display Mode
Pbd	Value Setting for Pressure Value Display Mode
PE	Display Peak Value over selected time range
bo	Display Bottom Value over selected time range
du	Display Difference over selected time range
dSF	Display Function Mode. On/Off
Fnc	Display Function. Selects display types.
1b	Display blinks pressure when Output 1 is Passing Normal when Output 1 is Non-Passing
2b	Display blinks pressure when Output 2 is Passing Normal when Output 2 is Non-Passing
1d	Display shows pressure when Output 1 is Passing Display shows special screen when Non-Passing
2d	Display shows pressure when Output 2 is Passing Display shows special screen when Non-Passing
SEt	Select Switch Output setting for MPS-31
CoL	Color Setting for MPS-31
Pot	MPS-4, Port Reference Selection
A	MPS-4, Display change of B port to A port static
b	MPS-4, Display change of A port to B port static
Ab	MPS-4, Display change of A port to change of B port
P1	MPS-7, Pressure Range Selection Vacuum
P2	MPS-7, Pressure Range Selection Low Pressure
P3	MPS-7, Pressure Range Selection Positive Pressure
P4	MPS-7, Pressure Range Selection Compound Pressure
SAuE	MPS-7, Energy Savings Mode, reduces current consumption
P-1	MPS-7, Peak Surveillance
oPt	Digital Input Sensors Only. Digital Input Mode for remote Zero reset of sensors
d.in	Digital Input
dch	Digital Channel
Scn	MPS-7 Scan Mode. Sensor scans and displays each channel for 3 sec.
Loc	Locked. Sensor programs cannot be changed
UnC	Unlocked. Sensor programs can be changed
Zero Reset	Sets Sensors reference point to current atmospheric conditions

Parker Pneumatic

Pneumatic Division
Richland, Michigan 49083

Installation & Service Instructions
CVM210P

CEK Emergency Stop
Vacuum Generators

ISSUED: September, 2004
Supersedes: June, 2003
Doc.# CVM-210P, ECN# 040000, Rev. 1

⚠ WARNING

To avoid unpredictable system behavior that can cause personal injury and property damage:

- **Disconnect electrical supply (when necessary) before installation, servicing, or conversion.**
- **Disconnect air supply and depressurize all air lines connected to this product before installation, servicing, or conversion.**
- **Operate within the manufacturer's specified pressure, temperature, and other conditions listed in these instructions.**
- **Medium must be moisture-free if ambient temperature is below freezing.**
- **Service according to procedures listed in these instructions.**
- **Installation, service, and conversion of these products must be performed by knowledgeable personnel who understand how pneumatic products are to be applied.**
- **After installation, servicing, or conversion, air and electrical supplies (when necessary) should be connected and the product tested for proper function and leakage. If audible leakage is present, or the product does not operate properly, do not put into use.**
- **Warnings and specifications on the product should not be covered by paint, etc. If masking is not possible, contact your local representative for replacement labels.**

Introduction

Follow these instructions when installing, operating, or servicing the product.

⚠ Cautions

- The CEK does not require lubrication to function like other pneumatic components.
- The CEK functions efficiently at 70 PSI while in operation. Regulate the inlet air pressure to 70 PSI during operations.
- Inlet compressed air levels below 70 PSI will yield lower vacuum levels and could effect the overall performance of the system.
- Filtrate the inlet air to protect the CEK against contaminating matter typically found in compressed air systems (i.e. rust, water, compressor oil, or other foreign particles). A standard 40 micron filter is recommended.
- The CEK inlet compressed air must be filtered, regulated, and periodically maintenance to insure maximum operating performance and warranty.
- The air economizing functions and check valves require proper fittings and suction cups to prevent vacuum leakage. The vacuum ports are 3/8" G or 3/8" NPT female threads and require appropriate fittings to properly seal the systems. For NPT fittings, use a dry seal or tape to seal the fittings throughout the system.
- Primary vacuum filtration is always recommended between the cups and the vacuum ports of the generator. Collection of particles and other matter from the work piece will reduce the maximum vacuum level of the unit over a period of use. The frequency of the filter maintenance will vary with each environment and application.
- Each CEK incorporates a small filter housed on the body to protect the internal components of the generator. Additional maintenance of this filter will also vary with each environment and application.

Forward

The CEK is a basic CVK unit with a Normally Closed Emergency Stop valve that maintains the last state of air during an emergency stop or power loss. In addition to this, an air-economizing valve has been added to interrupt the air supply by connecting the output signal from the sensor to minimize air consumption.
Typically, with a Normally Closed air Circuit, the user controls vacuum with a command signal. During an Emergency Stop Event or power failure event, the vacuum command signal is lost, but, the Vacuum valve **(1)** remains in the current operating position due to the construction of the valve. The air-economizing valve **(5)**, in a Normally Open configuration, passes the air supply from the Vacuum On / Off valve **(1)**. The Sensor **(2)** output activates the air-economizing valve **(5)** closing the air supply to the Normally Closed master valve. The Check Valve **(3)** maintains the achieved vacuum level until the hysteresis value of the Sensor **(2)** is reached or when the Vacuum valve **(1)** has been returned to the closed position to stop the vacuum operation.

Valve Controlled Emergency Stop Circuit

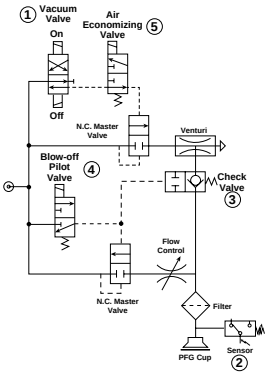

⚠ WARNING

FAILURE OR IMPROPER SELECTION OR IMPROPER USE OF THE PRODUCTS AND/OR SYSTEMS DESCRIBED HEREIN OR RELATED ITEMS CAN CAUSE DEATH, PERSONAL INJURY AND PROPERTY DAMAGE.

This document and other information from Parker Hannifin Corporation, its subsidiaries and authorized distributors provide product and/or system options for further investigation by users having technical expertise. It is important that you analyze all aspects of your application, including consequences of any failure and review the information concerning the product or systems in the current product catalog. Due to the variety of operating conditions and applications for these products or systems, the user, through its own analysis and testing, is solely responsible for making the final selection of the products and systems and assuring that all performance, safety and warning requirements of the application are met.

The products described herein, including without limitation, product features, specifications, designs, availability and pricing, are subject to change by Parker Hannifin Corporation and its subsidiaries at any time without notice.

EXTRA COPIES OF THESE INSTRUCTIONS ARE AVAILABLE FOR INCLUSION IN EQUIPMENT / MAINTENANCE MANUALS THAT UTILIZE THESE PRODUCTS. CONTACT YOUR LOCAL REPRESENTATIVE.

Specifications

Media	Non-Lubricated Compressed Air, Non-Corrosive Gases
Operating Pressure	70 PSI (5 kgf/cm^2)
Humidity	35 to 85%
Pressure Port	**N:** 1/4 NPT Female, **G:** 1/4 BSPP Female, **R:** 1/4 BSPT
Vacuum Port	**N:** 3/8 NPT Female, **G:** 3/8 BSPP Female, **R:** 3/8 BSPT
Operating Temperature	41 to 132°F (5 to 50°C)
Material	Aluminum, Brass, NBR
Manifold Weight	2-Station: 24 oz. (680g), 3-Station: 31 oz. (880g), 4-Station: 38 oz. (1080g), 5-Station: 45 oz. (1280g)

	Air-Economizing Valve and Blow-off Release Pilot	Emergency Stop Valve
Type of Control Valve	Pilot Valve	Double Solenoid
Manual Operation	Manual Override	Manual Overrides
Electrical Connection	Clip Connector with LED and Surge	Clip Connector with LED and Surge
Power Supply	24VDC ± 10%	24VDC ± 10%
Power Consumption	0.9W	0.9W
Operating Pressure	70 PSI (5 kgf/cm^2)	70 PSI (5 kgf/cm^2)
Air Supply	Normally Closed	Normally Closed

Performance

Item	Nozzle Diameter (mm)	Vacuum Degree at 70 PSI	Vacuum Flow (SCFM)	Air Consumption (SCFM)	Weight oz (g)
15HS	1.5	27	2.11	3.53	26.3 (750)
20HS	2.0	27	3.75	6.35	26.3 (750)
27HS	2.7	27	5.75	10.41	26.3 (750)

Evacuation Time

Series / Nozzle Diameter	Air Supply Pressure	Air Consumption	Evacuation Time in sec / ft^3 * to reach different Vacuum Levels (inHg)								
	PSI	SCFM	3	6	9	12	15	18	21	24	27
CEK-15HS	70	3.53	2.3	4.8	8.0	12.4	18.4	26.3	40.4	62.1	189.3
CEK-15LS	70	3.53	1.1	2.8	5.0	9.3	16.7	—	—	—	—
CEK-20HS	70	6.36	1.1	2.5	5.0	7.6	12.1	18.6	29.9	53.4	129.9
CEK-20LS	70	6.36	0.8	2.3	4.0	7.6	15.5	—	—	—	—
CEK-27HS	70	10.42	0.6	2.0	3.0	5.6	8.5	13.3	21.2	42.1	—

* 1 ft^3 = 28.31 liters

Vacuum Flow (SCFM)

Nozzle Dia.	inHg										
	0	3	6	9	12	15	18	21	24	27	30
15HS	2.51	2.23	1.95	1.67	1.39	1.12	.85	.58	.30	—	—
20HS	3.75	3.34	2.93	2.50	2.12	1.70	1.28	.86	.44	—	—
27HS	5.75	5.09	4.43	3.77	3.11	2.45	1.80	1.15	.50	—	—

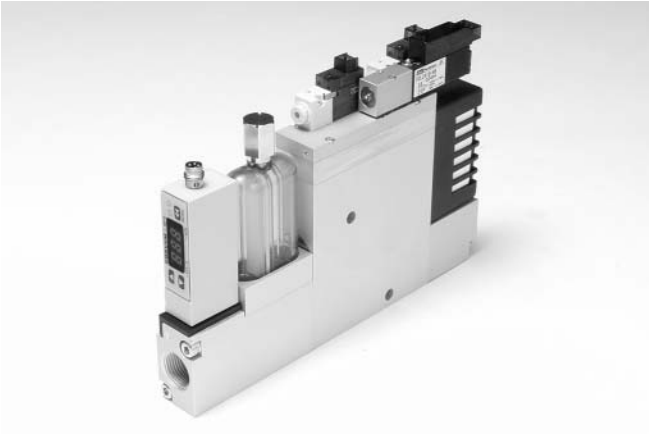

Generator

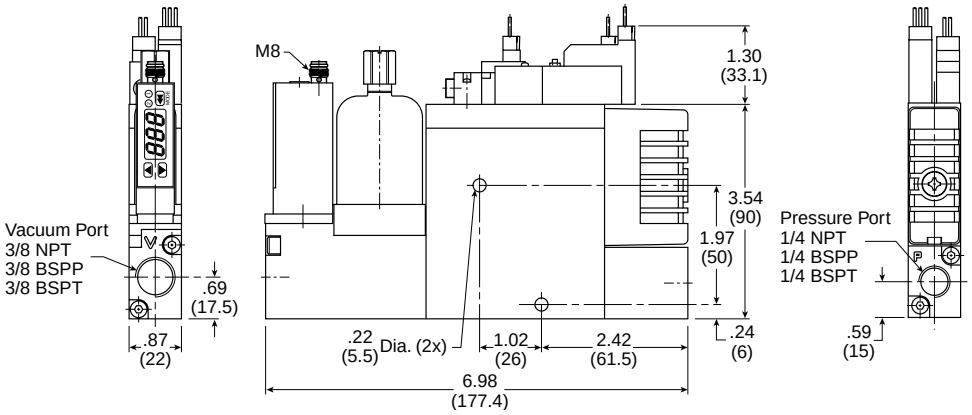

Manifold

3-Station Manifold Shown

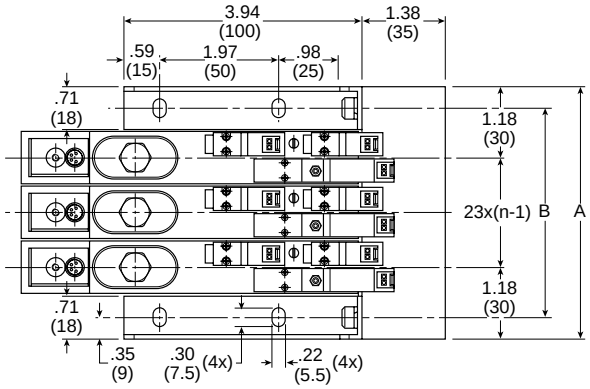

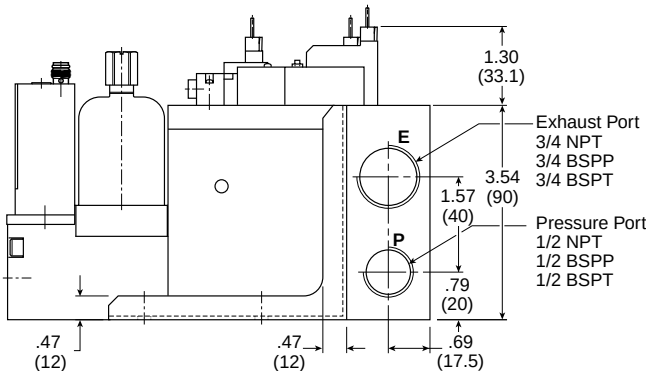

n	2	3	4	5
A	3.27 83	4.17 106	5.08 129	5.98 152
B	2.56 65	3.46 88	4.37 111	5.28 134

Inches (mm)
n = Number of Stations

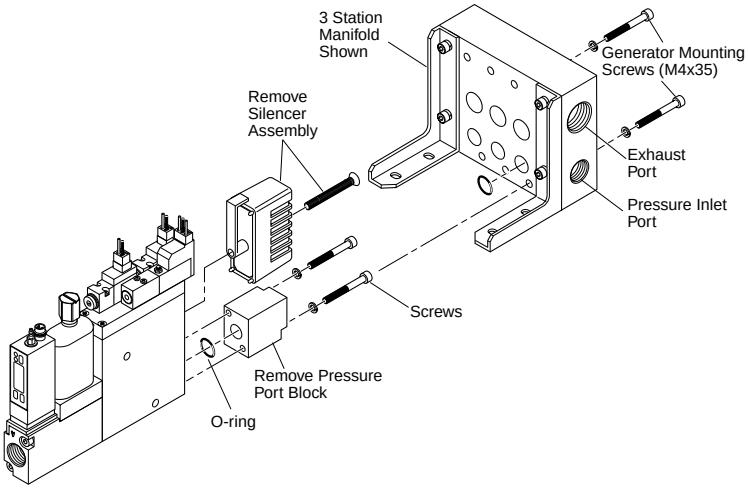

Manifold Assembly
Remove Pressure Port Block and Silencer Assembly. Use existing O-rings and Manifold Mounting Screws to secure the CEK unit to the Manifold.

Replacement Components

Item	Part Number	Description
1	CVK-S	Silencer
2 thru 7	CVK-F	Filter Kit
5	CVK-E	Filter Element
8, 10	MC2-24-B-10-D	Blow-off Pilot Valve
9, 10	MC2-24-A-10-V	Air-Economizing Valve
10	MC2-5L	500mm Clip Lead
11,13	PCL241B-NB-D24SP	Vacuum On / Off Valve, NPN
12,13	PCL241B-NB-D24UM	Vacuum On / Off Valve, PNP
13	PCL5-D24-CL5	500mm Clip Lead

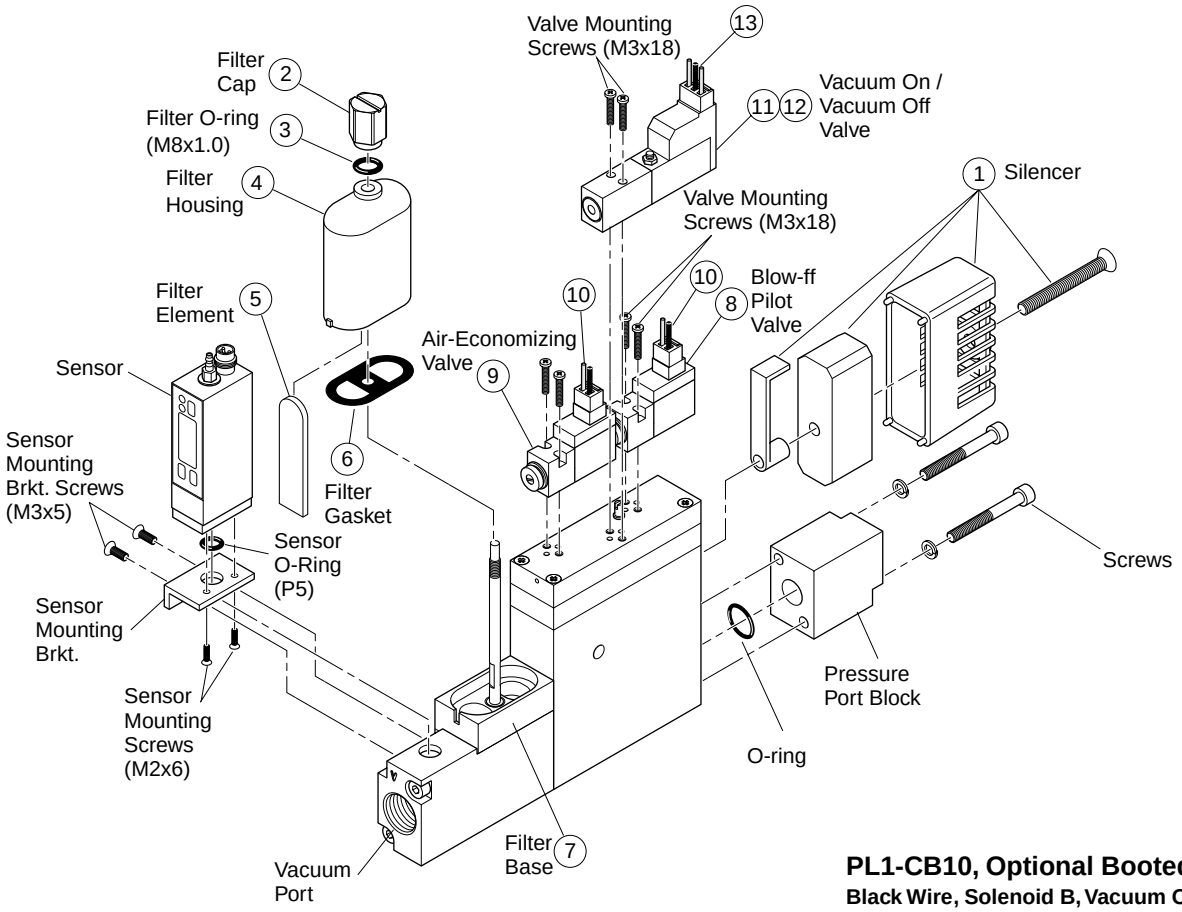

PL1-CB10, Optional Booted Cable

Black Wire, Solenoid B, Vacuum On
Red Wire, Common
White Wire, Solenoid A, Vacuum Off

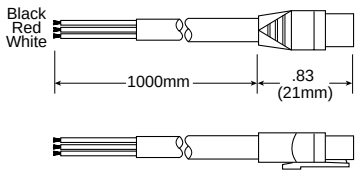

Pilot Valve Cable

MC2-5L (500mm) Lead*
MC2-10L (1000mm) Lead
(Connects Power Source to Vacuum & Blow-off Release Pilot Valves)
Positive "+" (Red Wire)
Negative "-" (Black Wire)
* Included with Generator

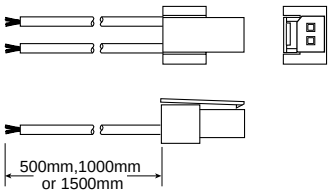

PCL5-D24-CL5* Cable

Black Wire, Solenoid B, Vacuum On
Red Wire, Common
Yellow Wire, Solenoid A, Vacuum Off
*Included with Generator

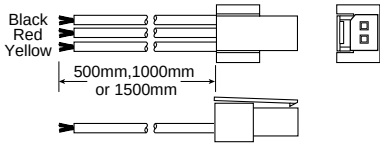

MC2-CB10 Valve Cable

(Connects Power Source to Vacuum & Blow-off Release Pilot Valves)
Positive "+" (Red Wire)
Negative "-" (Black Wire)

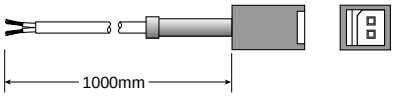

Blow-off Adjustment

The volume of air during the blow-off function to release the workpiece can be set by turning the needle adjustment up or down. Access the needle adjustment through opening of protective cover (topside).

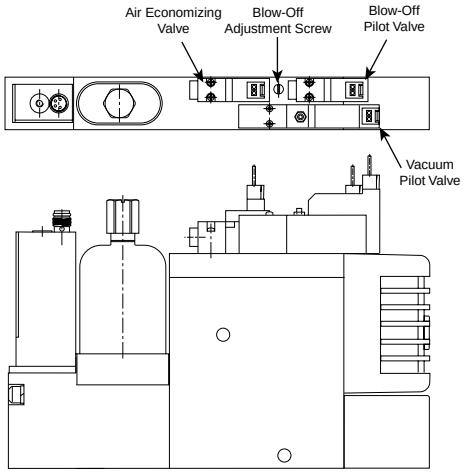

Sensors

The Convum MPS-2 sensor with display has two (2) individual switch outputs with hysteresis setting for feedback and controls.

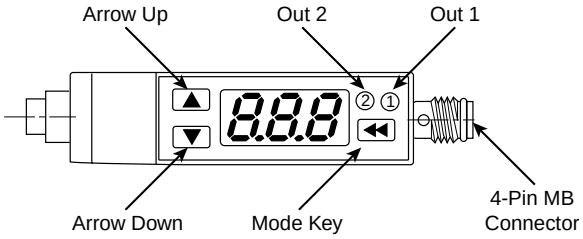

Factory Settings

OUTPUT 1	OUTPUT 2
Normally Open, N.O.	Normally Open, N.O.
H-1, Switch Point 18 inHg	H-2, Switch Point 10 inHg
h-1, Hysteresis 2.5 inHg Hysteresis Mode	h-2, Hysteresis 0.5 inHg Hysteresis Mode
Units of Measure; inHg	

Emergency or Power Failure Operating System (EOS)

(Patent Pending)

The Emergency Operating System is designed to maintain and continue the current operation mode of the vacuum generator when an emergency or power failure occurs by an adjustable or fixed vacuum level on the pressure sensor.

Air-Economizing Function

The CVK and CEK integrated vacuum generators have the capacity to minimize air consumption by utilizing the built in check valve. Once a predetermined vacuum level has been achieved (with a non-porous application) , the check valve can maintain the vacuum level within the system. The hysteresis feature of the vacuum sensor can maintain the vacuum level of the system indefinitely when properly wired to the vacuum solenoid pilot valve.

N.C. Output 1 - Air Economizing
N.O. Output 2 - Part Present Output

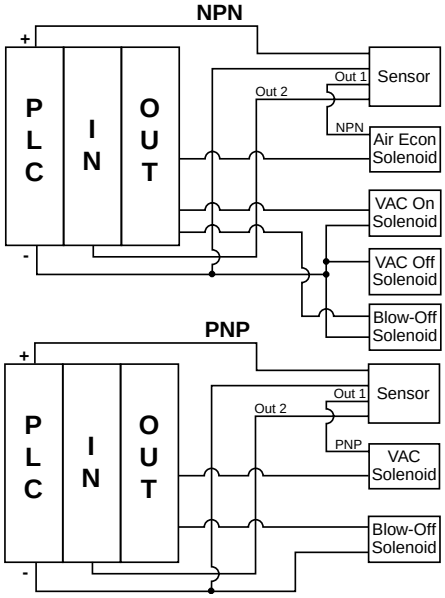

MPS-2 Versatile Programming

1 Hold
Press 1x

Output Set Open or Closed Selecting Units of Measure

Easy Mode Activation

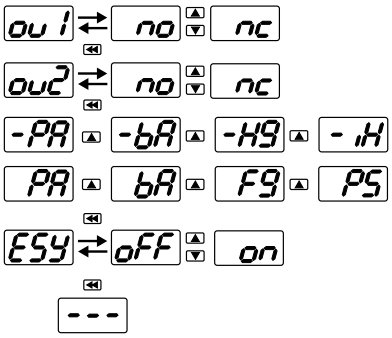

2 Press 2x

Output Mode 1 Hysteresis or Window Comparator

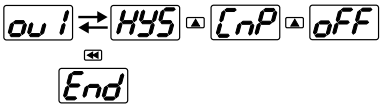

3 Press 4x

Output Mode 2 Hysteresis or Window Comparator

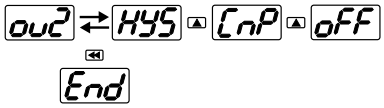

4 Press 1x

Output 1 Setting Hysteresis Mode

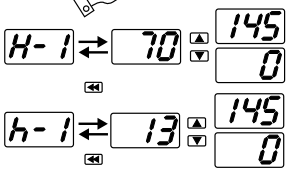

Window Comparator Mode

Low

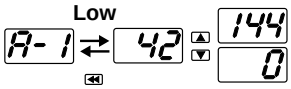

High

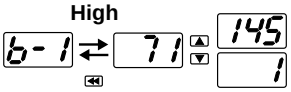

5 Press 3x

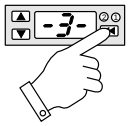

Output 2 Setting Hysteresis Mode

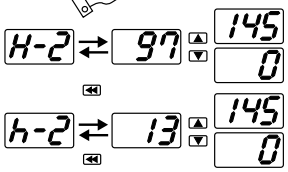

Window Comparator Mode

Low

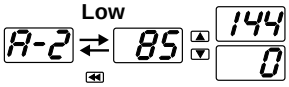

High

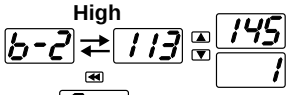

6 Press 5x

Automatic Teach Mode & Auto Surveillance

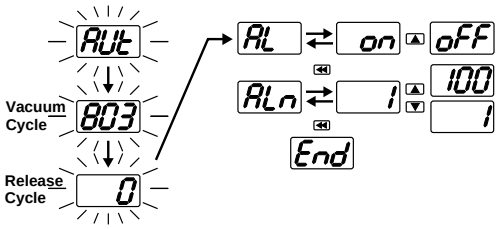

7 Press 6x

Display Refresh Settings / Output Response Time Interval

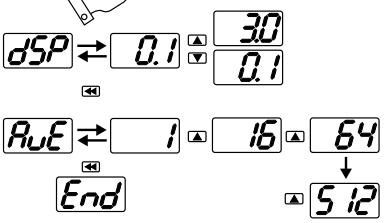

8 Press 7x

Display Peak Value Bottom Value or Their Difference

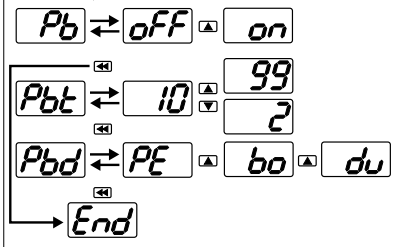

9 Press 8x

Special Display Features

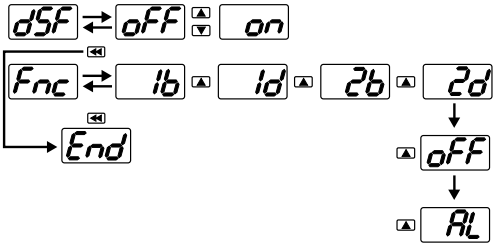

10 Hold
Press

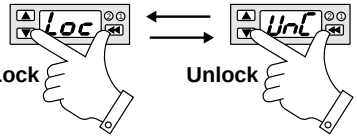

11 Press 1x

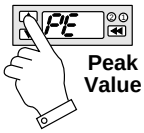

Press 1x

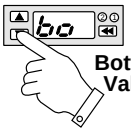

12 Press for 3 Seconds

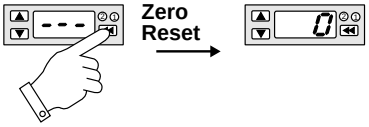

Parker Pneumatic

Pneumatic Division
Richland, Michigan 49083

Installation & Service Instructions
CVM-213P

CHF Vacuum Generators

ISSUED: April, 2004
Supersedes: None
Doc.# CVM-213P, NPR040061

⚠ WARNING

To avoid unpredictable system behavior that can cause personal injury and property damage:

- **Disconnect electrical supply (when necessary) before installation, servicing, or conversion.**
- **Disconnect air supply and depressurize all air lines connected to this product before installation, servicing, or conversion.**
- **Operate within the manufacturer's specified pressure, temperature, and other conditions listed in these instructions.**
- **Medium must be moisture-free if ambient temperature is below freezing.**
- **Service according to procedures listed in these instructions.**
- **Installation, service, and conversion of these products must be performed by knowledgeable personnel who understand how pneumatic products are to be applied.**
- **After installation, servicing, or conversion, air and electrical supplies (when necessary) should be connected and the product tested for proper function and leakage. If audible leakage is present, or the product does not operate properly, do not put into use.**
- **Warnings and specifications on the product should not be covered by paint, etc. If masking is not possible, contact your local representative for replacement labels.**

Introduction

Follow these instructions when installing, operating, or servicing the product.

Installation

Secure CHF unit. Silencers are included with the CHF generator series. If a tube connector is selected by the user for the exhaust port as opposed to the silencer, plumb the exhaust to an appropriate collector.

⚠ Cautions

- Do not operate CHF generators outside the temperature range and pressures listed in the specifications section of this instruction sheet.
- All normally closed valve supply circuits will interrupt the air supply to the venturi during a power failure or Emergency Stop condition. As a result, the product being transferred may be dropped, possibly creating a hazard to the surrounding environment. To avoid hazardous situations during a power loss or Emergency Stop condition, consider a normally open valve supply circuit or an Emergency Stop system.
- It is always recommended to dedicate one suction cup to a single MCA generator for the best response and maximize the vacuum level per individual cup. If more than one cup is used per generator, the vacuum level of the pick-and-place system may drop to an unsafe level if one of the pads separates from the product.

Specifications

Media	Non-Lubricated Air, Non-Corrosive Gases
Operating Pressure	80 PSI
Operating Temperature	32°F to 120°F
Material	**Body:** Aluminum **Nozzle & Diffuser:** Polymer **Seals:** BUNA N

Normally Closed Vacuum Circuit

The Vacuum Pilot is Energized to Activate Vacuum

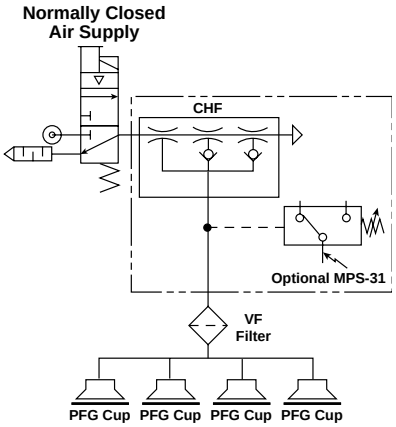

Normally Open Vacuum Circuit

The Vacuum Pilot is Energized to Deactivate Vacuum

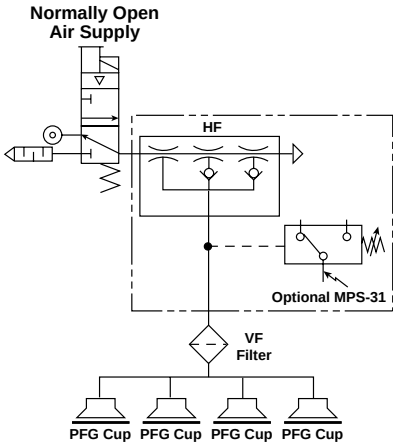

⚠ WARNING

FAILURE OR IMPROPER SELECTION OR IMPROPER USE OF THE PRODUCTS AND/OR SYSTEMS DESCRIBED HEREIN OR RELATED ITEMS CAN CAUSE DEATH, PERSONAL INJURY AND PROPERTY DAMAGE.

This document and other information from Parker Hannifin Corporation, its subsidiaries and authorized distributors provide product and/or system options for further investigation by users having technical expertise. It is important that you analyze all aspects of your application, including consequences of any failure and review the information concerning the product or systems in the current product catalog. Due to the variety of operating conditions and applications for these products or systems, the user, through its own analysis and testing, is solely responsible for making the final selection of the products and systems and assuring that all performance, safety and warning requirements of the application are met.

The products described herein, including without limitation, product features, specifications, designs, availability and pricing, are subject to change by Parker Hannifin Corporation and its subsidiaries at any time without notice.

EXTRA COPIES OF THESE INSTRUCTIONS ARE AVAILABLE FOR INCLUSION IN EQUIPMENT / MAINTENANCE MANUALS THAT UTILIZE THESE PRODUCTS. CONTACT YOUR LOCAL REPRESENTATIVE.

Performance

Item	Motor Equivalent	Vacuum Degree at 80 PSI	Vacuum Flow (SCFM)	Air Consumption (SCFM Max.)	Weight (grams)
CHF-10	0.5 kw	27.3	12.5	3.3	865
CHF-20	1.0 kw	27.3	20.9	6.5	875
CHF-30	2.0 kw	27.3	26.3	9.6	885
CHF-40	kw	27.3	31.8	14	965

Evacuation Time (SEC)

Series	Air Supply Pressure (PSI)	Air Consumption (SCFM)	Evacuation time in sec / ft³ to reach different Vacuum Levels (inHg)								
			3	6	9	12	15	18	21	24	27
CHF-10	80	3.3	0.42	1.48	3.39	8.26	15.47	23.31	38.78	66.96	189.22
CHF-20	80	6.5	0.21	0.64	1.70	4.03	7.63	11.65	19.28	33.48	94.50
CHF-30	80	9.6	0.21	0.64	1.27	3.39	6.36	9.53	16.10	27.76	78.82
CHF-40	80	14.0	0.17	0.42	1.27	2.33	4.03	5.93	9.75	16.95	47.67

Vacuum Flow (SCFM)

Nozzle Dia.	inHg										
	0	3	6	9	12	15	18	21	24	27	30
CHF-10	12.50	7.24	4.69	2.29	1.63	1.27	0.85	0.49	0.21	0.03	—
CHF-20	20.90	12.12	7.88	3.85	2.76	2.12	1.45	0.81	0.35	0.04	—
CHF-30	26.30	15.27	9.89	4.84	3.46	2.68	1.83	1.02	0.42	0.05	—
CHF-40	31.80	18.50	12.00	5.90	4.20	3.30	2.30	1.30	0.60	0.06	—

Replacement Components

Part Number	Description
SFCHF90NN	CHF- Repair Kit
146021A	0 to 30 inHg Gauge
SFBW15	Bracket Kit (Includes 4 Brackets & 4 M5 x 15 Screws
S1S001	Silencer (Flow Thru)

Dimensions

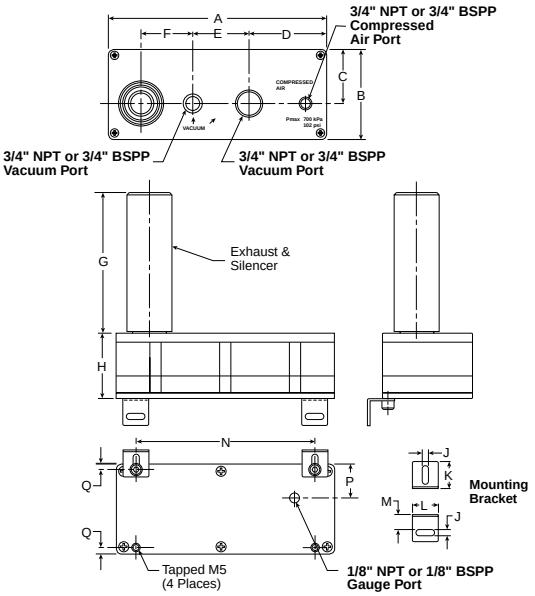

Item	A	B	C	D	E	F	G	H	J	K	L	M	N	P	Q
CHF-10, 20, 30	7.64 (194)	3.15 (80)	1.89 (48)	2.72 (69)	1.97 (50)	1.81 (46)	4.84 (123)	1.69 (43)	.22 (5.5)	.94 (24)	.91 (23)	.51 (13)	6.26 (159)	1.26 (32)	.20 (5)
CHF-40	7.64 (194)	3.15 (80)	1.89 (48)	2.72 (69)	1.97 (50)	1.81 (46)	4.84 (123)	2.28 (58)	.22 (5.5)	.94 (24)	.91 (23)	.51 (13)	6.26 (159)	1.26 (32)	.20 (5)

Inches (mm)

Pneumatic Division
Richland, Michigan 49083

Installation & Service Instructions
CVM214P

CVXCEK Emergency Stop
Vacuum Generators Design B

ISSUED: February, 2012
Supersedes: October, 2004
Doc.# CVM214P, EN# 110988, Rev. 3

⚠ WARNING

To avoid unpredictable system behavior that can cause personal injury and property damage:

- **Disconnect electrical supply (when necessary) before installation, servicing, or conversion.**
- **Disconnect air supply and depressurize all air lines connected to this product before installation, servicing, or conversion.**
- **Operate within the manufacturer's specified pressure, temperature, and other conditions listed in these instructions.**
- **Medium must be moisture-free if ambient temperature is below freezing.**
- **Service according to procedures listed in these instructions.**
- **Installation, service, and conversion of these products must be performed by knowledgeable personnel who understand how pneumatic products are to be applied.**
- **After installation, servicing, or conversion, air and electrical supplies (when necessary) should be connected and the product tested for proper function and leakage. If audible leakage is present, or the product does not operate properly, do not put into use.**
- **Warnings and specifications on the product should not be covered by paint, etc. If masking is not possible, contact your local representative for replacement labels.**

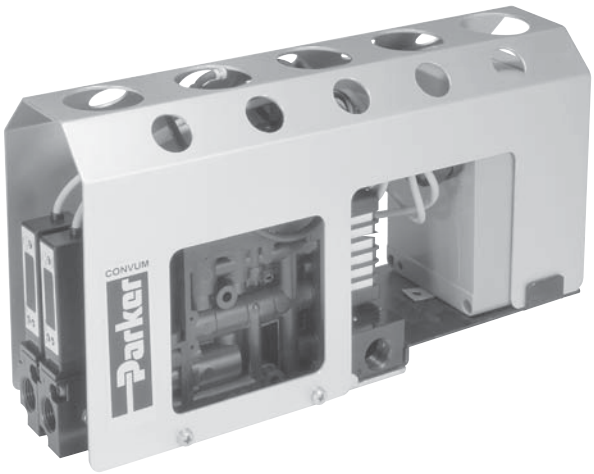

Introduction

Follow these instructions when installing, operating, or servicing the product.

⚠ Cautions

- The CVXCEK does not require lubrication to function like other pneumatic components.
- The CVXCEK functions efficiently at 70 PSI while in operation. Regulate the inlet air pressure to 70 PSI during operations.
- Inlet compressed air levels below 70 PSI will yield lower vacuum levels and could effect the overall performance of the system.
- Filtrate the inlet air to protect the CVXCEK against contaminating matter typically found in compressed air systems (i.e. rust, water, compressor oil, or other foreign particles). A standard 40 micron filter is recommended.
- The CVXCEK inlet compressed air must be filtered, regulated, and periodically maintenance to insure maximum operating performance and warranty.
- The air economizing functions and check valves require proper fittings and suction cups to prevent vacuum leakage. The vacuum ports are 3/8" G or 3/8" NPT female threads and require appropriate fittings to properly seal the systems. For NPT fittings, use a dry seal or tape to seal the fittings throughout the system.
- Primary vacuum filtration is always recommended between the cups and the vacuum ports of the generator. Collection of particles and other matter from the work piece will reduce the maximum vacuum level of the unit over a period of use. The frequency of the filter maintenance will vary with each environment and application.
- Each CVXCEK incorporates a small filter housed on the body to protect the internal components of the generator. Additional maintenance of this filter will also vary with each environment and application.

Forward

The CVXCEK is a basic MC72 unit with a Detent Vacuum Valve that maintains the last state of air during an emergency stop or power loss. In addition to this, an air-economizing valve has been added to interrupt the air supply by connecting the output signal from the sensor to minimize air consumption.

⚠ WARNING

FAILURE OR IMPROPER SELECTION OR IMPROPER USE OF THE PRODUCTS AND/OR SYSTEMS DESCRIBED HEREIN OR RELATED ITEMS CAN CAUSE DEATH, PERSONAL INJURY AND PROPERTY DAMAGE.

This document and other information from Parker Hannifin Corporation, its subsidiaries and authorized distributors provide product and/or system options for further investigation by users having technical expertise. It is important that you analyze all aspects of your application, including consequences of any failure and review the information concerning the product or systems in the current product catalog. Due to the variety of operating conditions and applications for these products or systems, the user, through its own analysis and testing, is solely responsible for making the final selection of the products and systems and assuring that all performance, safety and warning requirements of the application are met.

The products described herein, including without limitation, product features, specifications, designs, availability and pricing, are subject to change by Parker Hannifin Corporation and its subsidiaries at any time without notice.

EXTRA COPIES OF THESE INSTRUCTIONS ARE AVAILABLE FOR INCLUSION IN EQUIPMENT / MAINTENANCE MANUALS THAT UTILIZE THESE PRODUCTS. CONTACT YOUR LOCAL REPRESENTATIVE.

Specifications

Media	Non-Lubricated Compressed Air, Non-Corrosive Gases
Operating Pressure	70 PSI
Humidity	35 to 85%
Pressure Port	**N:** 1/4 NPT Female, **G:** 1/4 BSPP Female
Vacuum Port	**N:** 3/8 NPT Female, **G:** 3/8 BSPP Female
Operating Temperature	41 to 132°F (5 to 50°C)
Material	Body (PA, PBT), Brass, Al, NBR, SUS, FKM
Manifold Weight	1-Station: 49 oz. (1404g), 2-Station: 63 oz. (1787g)

Air-Economizing Valve and Blow-off Release Pilot		**Vacuum Pilot Valve**	**Sensors**
Type of Control	Single Solenoid	Double Solenoid	MPS-23 Pressure Sensor
Manual Operation	Manual Override	Manual Overrides	N/A
Electrical Connection	Clip Connector	Clip Connector	M8, 4-Pin
Power Supply	24VDC ± 10%	24VDC ± 10%	10.8 to 30VDC
Solenoid Power Consumption	0.6W with LED and Surge	2.0W with LED and Surge	55mA
Operating Pressure	70 PSI	70 PSI	-14.7 PSI to 72.5 PSI
Air Supply	Normally Closed	Normally Closed	N/A

Note: 110VAC units use 24VDC Solenoids and Sensors

Performance

Series / Nozzle Diameter	Nozzle Diameter (mm)	Vacuum Degree at 70 PSI	Vacuum Flow per Channel (SCFM)	Air Consumption per Channel (SCFM)
CVXCEK27	2.5	27	5.20	9.36

Evacuation Time

Series / Nozzle Diameter	Air Supply Pressure	Per Channel	Air Consumption to reach different Vacuum Levels (inHg) Evacuation Time per Channel in sec / ft³ *								
	PSI	SCFM	3	6	9	12	15	18	21	24	27
CVXCEK27	70	10.42	0.7	2.2	3.3	6.1	9.3	14.5	23.2	46.1	—

* 1 ft³ = 28.31 liters

Vacuum Flow (SCFM)

Series / Nozzle Diameter	inHg										
	0	3	6	9	12	15	18	21	24	27	30
CVXCEK27	5.20	4.60	4.01	3.41	2.80	2.22	1.63	1.04	0.46	—	—

Model Number Index

(Bold Items are Stocked)

CVXCEK 27 D3 2 49 N B

Nozzle Diameter
- **27 25HS 2.5mm**

Electrical Enclosure
- D1 M12, 110VAC
- **D3 M12, 24VDC, PNP**
- D4 M12, 110VAC, w/ Mtg. Plate
- D6 M12, 24VDC, PNP w/ Mtg. Plate
- N1 M18, 110VAC
- **N3 M18, 24VDC, PNP**
- N4 M18, 110VAC, w/ Mtg. Plate
- N6 M18, 24VDC, PNP w/ Mtg. Plate

Number of Channels
- 1 1 Generator w/ Blanking Plate
- **2 2 Generators**

Voltage
- **49 24VDC**
- 53 110VAC

Port Threads
- **N NPT**
- G BSPP

Engineering Level
- **B Current**

Sensors

The Convum MPS-23 sensor with display has two (2) individual switch outputs with hysteresis setting for feedback and controls.

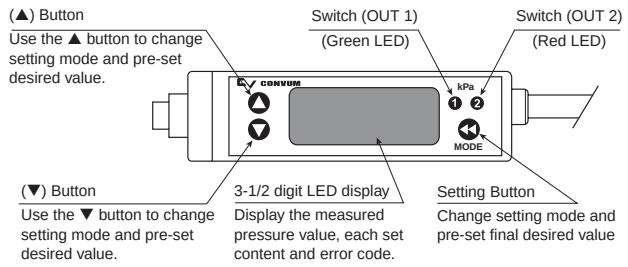

Factory Settings (24VDC)

OUT 1 AIR ECONOMIZING	OUT 2 PART PRESENCE
N.O. Below n_1, N.C. Above n_1	N.C. Below n_3, N.O. Above n_3
P_1, Switch Point 18 inHg	n_3, Switch Point 10 inHg
P_2, Hysteresis 15.5 inHg	n_4, Hysteresis 9.5 inHg
Hysteresis Mode	Hysteresis Mode
Units of Measure; inHg	

Factory Settings (110VAC)

OUT 1 AIR ECONOMIZING	OUT 2 PART PRESENCE
N.O. Below P_1, N.C. Above P_1	N.O. Below P_3, N.O. Above P_3
P_1, Switch Point 18 inHg	P_3, Switch Point 10 inHg
P_2, Hysteresis 15.5 inHg	P_3, Hysteresis 9.5 inHg
Hysteresis Mode	Hysteresis Mode
Units of Measure; inHg	

Sensor settings must be set so that n_1 > n_2 and P_3 > P_4.

AIR ECONOMIZING SWITCH POINT IS FACTORY SET AT 18 inHg. ALL SYSTEM DESIGN PARAMETERS MUST BE ANALYZED BEFORE CHANGING "P_1". Air Economizing function will be turned off by setting "P_1" above the maximum vacuum pressure that the system can create.

It may be necessary to adjust the part presence Output 2 to avoid false signals when vacuum is falsely created by tubing or fitting flow restrictions in an open system.

Blow-off Adjustment

The volume of air during the blow-off function to release the workpiece can be set by turning the needle adjustment up or down. Access the needle adjustment through opening of protective cover (topside).

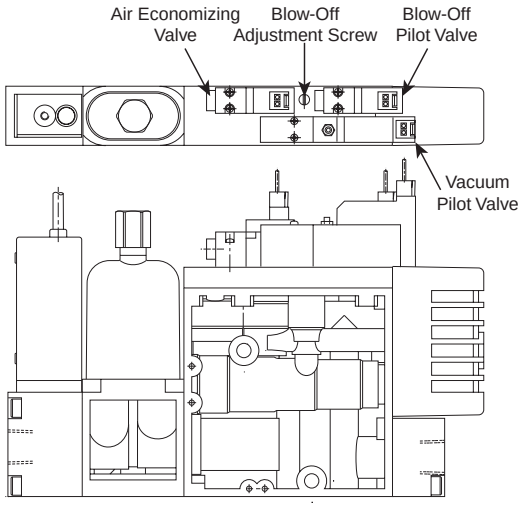

Valve Controlled Emergency Stop Circuit

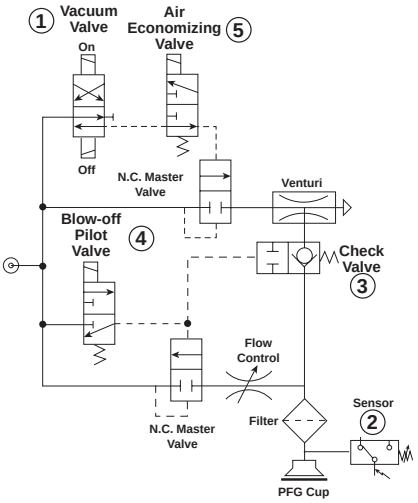

Typically, with a Normally Closed Air Circuit, the user controls vacuum with a command signal. Depending on the type of Emergency Stop Event or power failure event, the CVXCEK will either create the maximum degree of vacuum that the system can create, continue in air-economizing mode, or continue in the idle (Vacuum Off) state. If during **VACUUM ON** the Output Power is removed, the Vacuum Valve **(1)** remains in the current operating position due to the construction of the valve. The Air-economizing Valve **(5)**, in a Normally Open configuration, passes the air supply from the Vacuum Valve **(1)**. Because Input Power is still on, the Sensor **(2)** activates the Air-economizing Valve **(5)** closing the air supply to the Normally Closed Master Valve. Air-economizing functions are still operational. The Check Valve **(3)** maintains the achieved vacuum level until the hysterisis value of the Sensor **(2)** is reached. Normal conditions will apply when Output Power is restored.

Operation Mode

MODES	VACUUM ON	VACUUM OFF	BLOW-OFF
Normal Conditions	Air Economizing 18 to 15.5 inHg	Idle	Blow-off On Blow-off Idle
EMERGENCY STOP EVENT			
Input Power On Output Power Off	Air Economizing 18 to 15.5 inHg	Idle	On ↓ Idle Idle ↓ Idle
Input Power Off Output Power On	Vacuum On ↓ Max. Vacuum On	Idle	On ↓ Idle Idle ↓ Idle
Input Power Off Output Power Off	Vacuum On ↓ Max. Vacuum On	Idle	On ↓ Idle Idle ↓ Idle
Restore Power Input Power On Output Power On	Vacuum On Air Economizing 18 to 15.5 inHg	Idle	Idle

Emergency or Power Failure Operating System (EOS)

(Patent Pending)

The Emergency Operating System is designed to maintain and continue the current operation mode of the vacuum generator when an emergency or power failure occurs by an adjustable or fixed vacuum level on the pressure sensor.

CVXCEK*********B

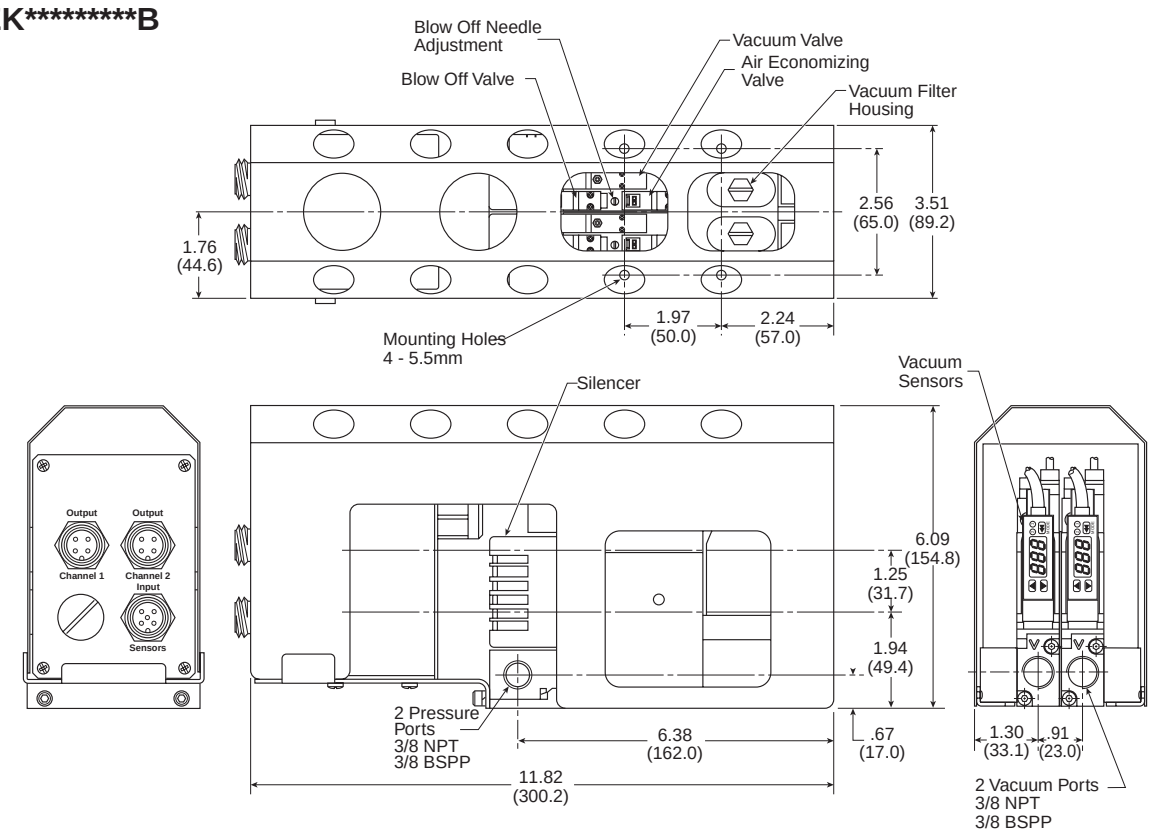

Optional Mounting Plate

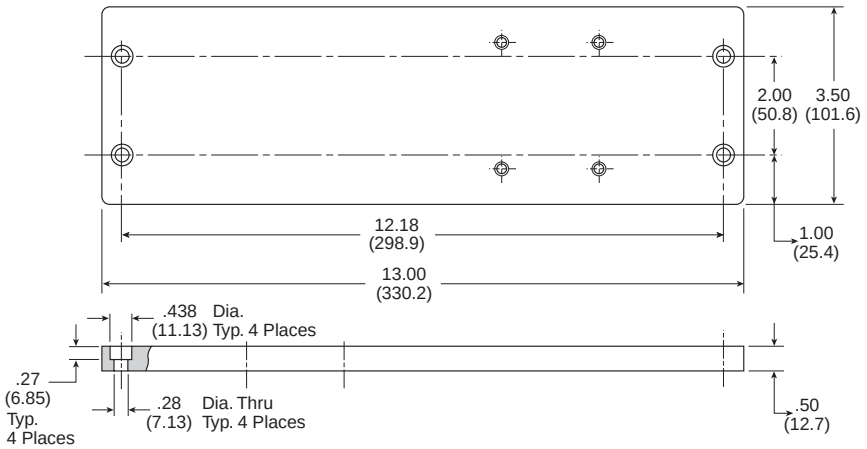

Discrete Kits

PSCEKD1A - M12, 110VAC
PSCEKN1A - M18, 110VAC
PSCEKN3A - M18, 24VDC
PSCEKD3A - M12, 24VDC

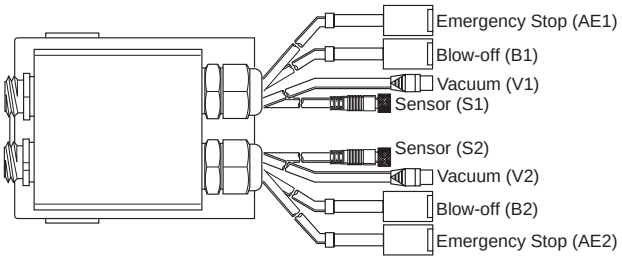

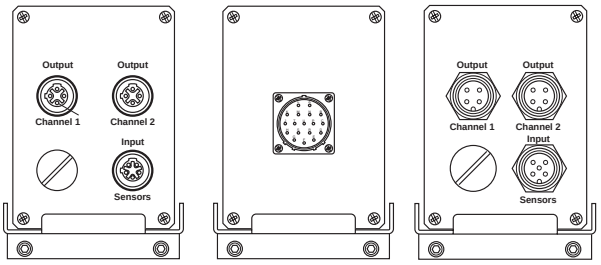

PSCEKD1A PSCEKN1A PSCEKN3A PSCEKD3A

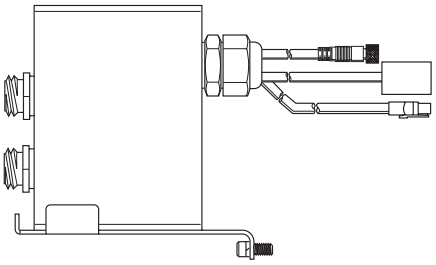

CVXCEK Pin Outs

M12, 24VDC

Output - 4-Pin, M12, Keyed Male
Input - 5-Pin, M12, Keyed Male

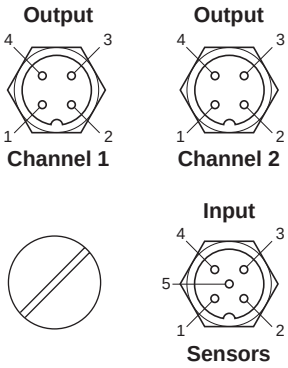

1	Not Used	1	Not Used	1	Power
2	Out CH1 Blow Off	2	Out CH2 Blow Off	2	CH2 Part Presence
3	Common	3	Common	3	Common
4	Out CH1 VAC	4	Out CH2 VAC	4	CH1 Part Presence
				5	Not Used

M12, 110VAC

Output - 4-Pin, M12, Double Keyed Male
Input - 5-Pin, M12, Double Keyed Male

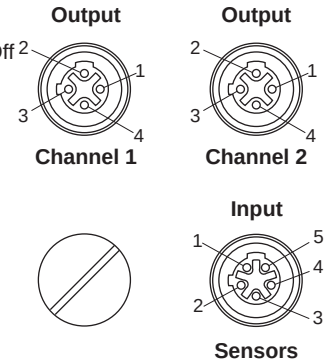

1	Out CH1 Blow Off / Vacuum Off	1	Out CH2 Blow Off / Vacuum Off	1	CH1 Sensor Power
2	Out CH1 Vacuum On	2	Out CH2 Vacuum On	2	CH2 Sensor Power
3	Common	3	Common	3	Common
4	Ground	4	Ground	4	CH2 Part Presence
				5	CH1 Part Presence

M18, 24VDC & 110VAC

18-Pin Connector

24VDC

A	CH2 Blow Off
B	CH2 Sensor Power
C	CH2 Part Presence
D	CH2 VAC Control
E	CH1 Blow Off
F	CH1 Sensor Power
G	CH1 Part Presence
H	CH1 VAC Control
J	DC Voltage Monitor
K	Common
L	Ground
M	Not Used
N	Not Used
P	Output Power
R	Not Used
S	Not Used
T	Not Used
U	Not Used

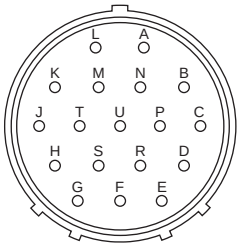

Face View - Male 18-Pin Connector

110VAC

A	CH2 Blow Off
B	CH2 Sensor Power
C	CH2 Part Presence
D	CH2 VAC Control
E	CH1 Blow Off
F	CH1 Sensor Power
G	CH1 Part Presence
H	CH1 VAC Control
J	AC Voltage Monitor
K	Common
L	Ground
M	Not Used
N	Not Used
P	Not Used
R	Not Used
S	Not Used
T	Output Power
U	Not Used

Notes: Pin B & F are jumpered inside unit.
Either pin can connect power to both sensors.

Pin P / T & J are jumpered inside unit.
This is for monitoring power only. Pin P / T is not necessary for operation of the unit.

Replacement Components

Item	Part Number	Description
1	CVK-S	Silencer
2 thru 7	CVK-F	Filter Kit
5	CVK-E	Filter Element
8	MC2-24-B-10-D	Blow-off Pilot Valve
9	MC2-24-A-10-V	Air-Economizing Valve
10	MC2-CB10	1000mm Clip Lead
11	PCL241B-NB-D24UM	Vacuum On / Off Valve, PNP
12	PL1-CB10	1000mm Clip Lead
13	MPS-V23C-NC	Pressure Sensor

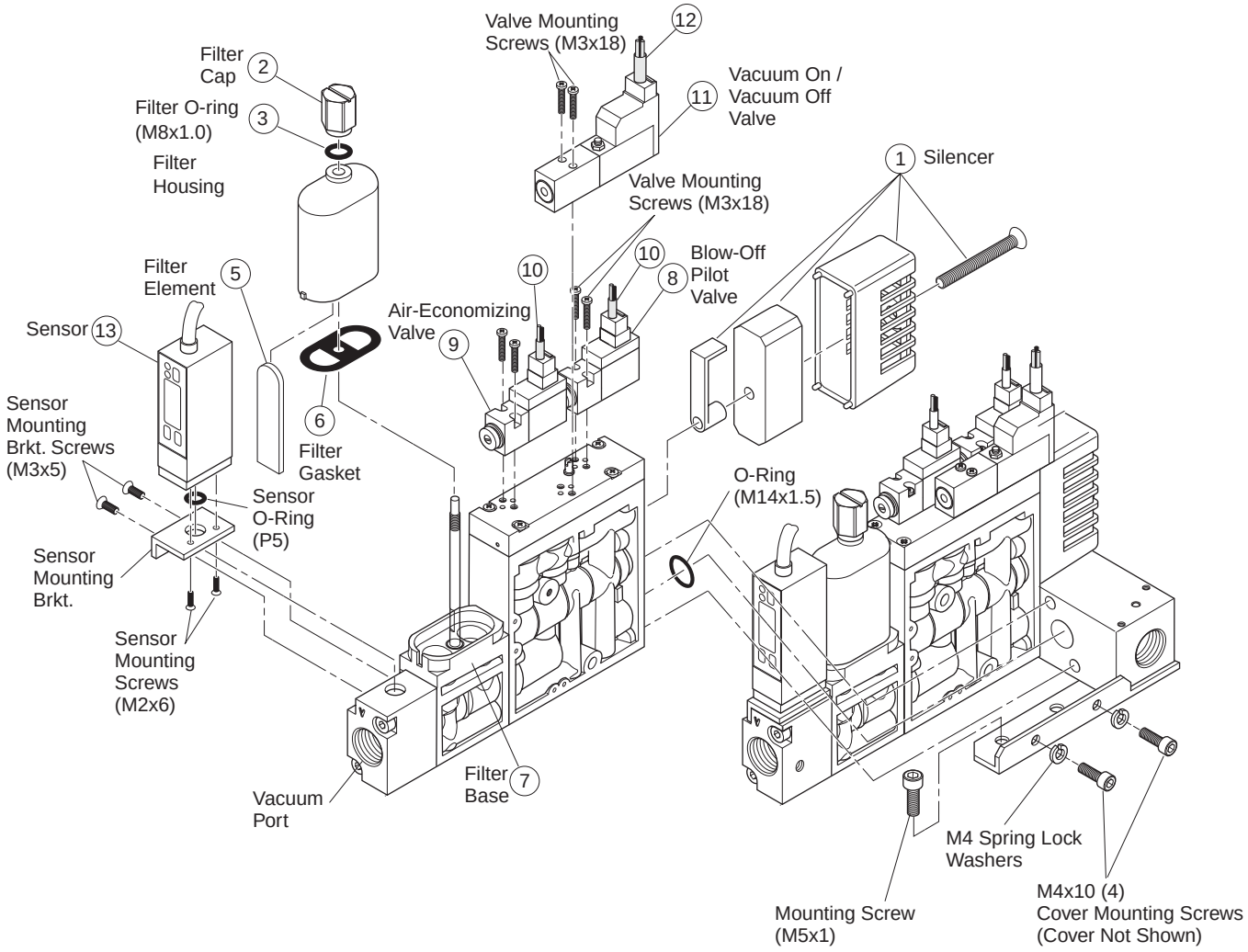

PL1-CB10, Valve Cable

Black Wire, Solenoid B, Vacuum On

Red Wire, Common

White Wire, Solenoid A, Vacuum Off

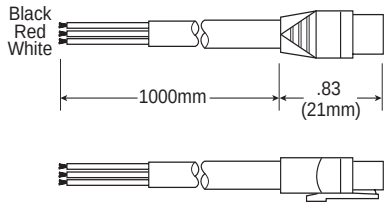

MC2-CB10 Valve Cable

(Connects Power Source to Vacuum & Blow-off Release Pilot Valves)

Positive “+” (Red Wire)

Negative “-” (Black Wire)

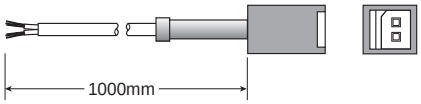

CVXCEK - System Logic (24VDC Shown)

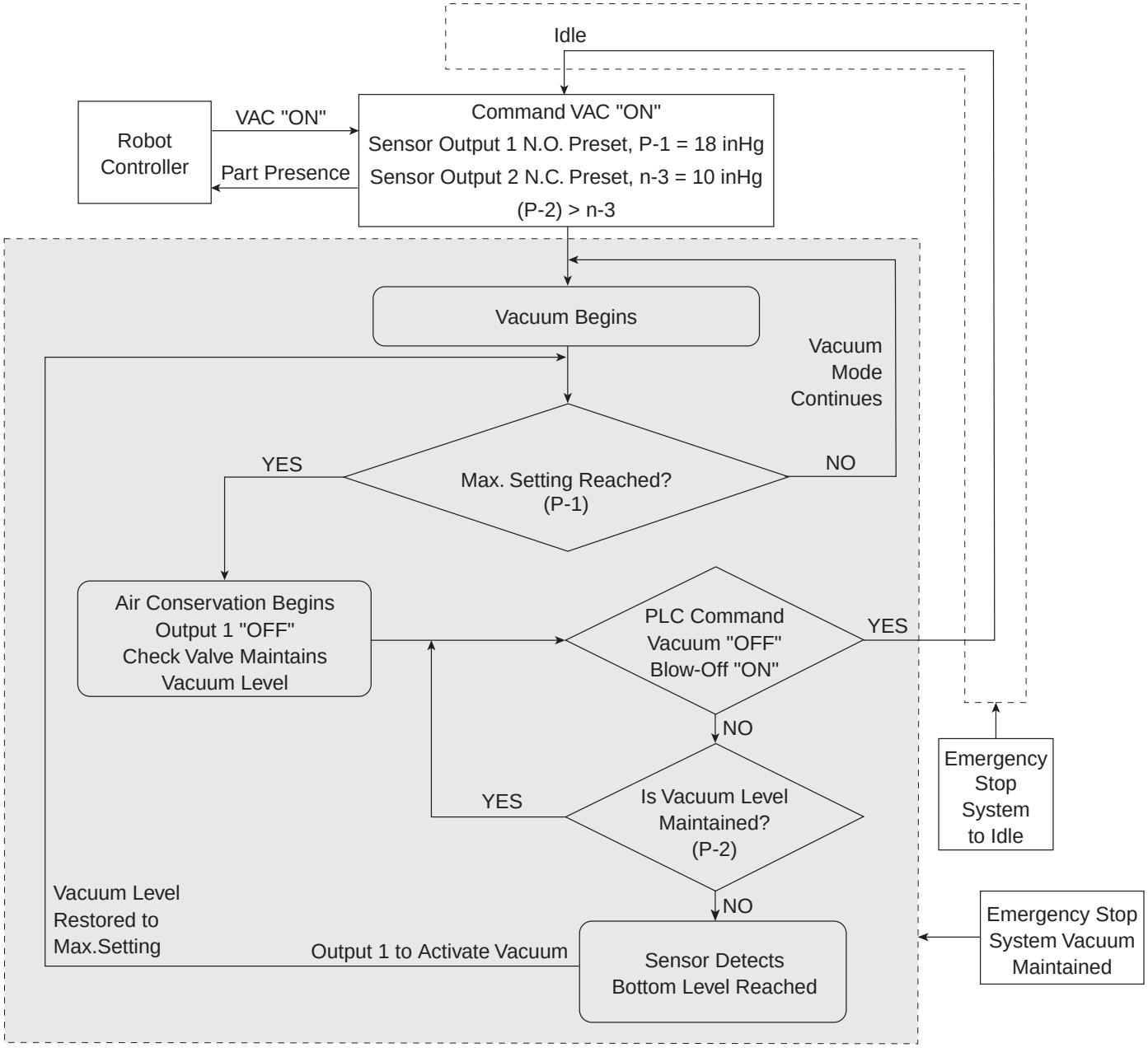

Programming Features MPS-23 1-Color Generator Mount

***For MPS-2 sensors used in previous design, see www.parker.com/pneu/sensors**

Initial setting mode

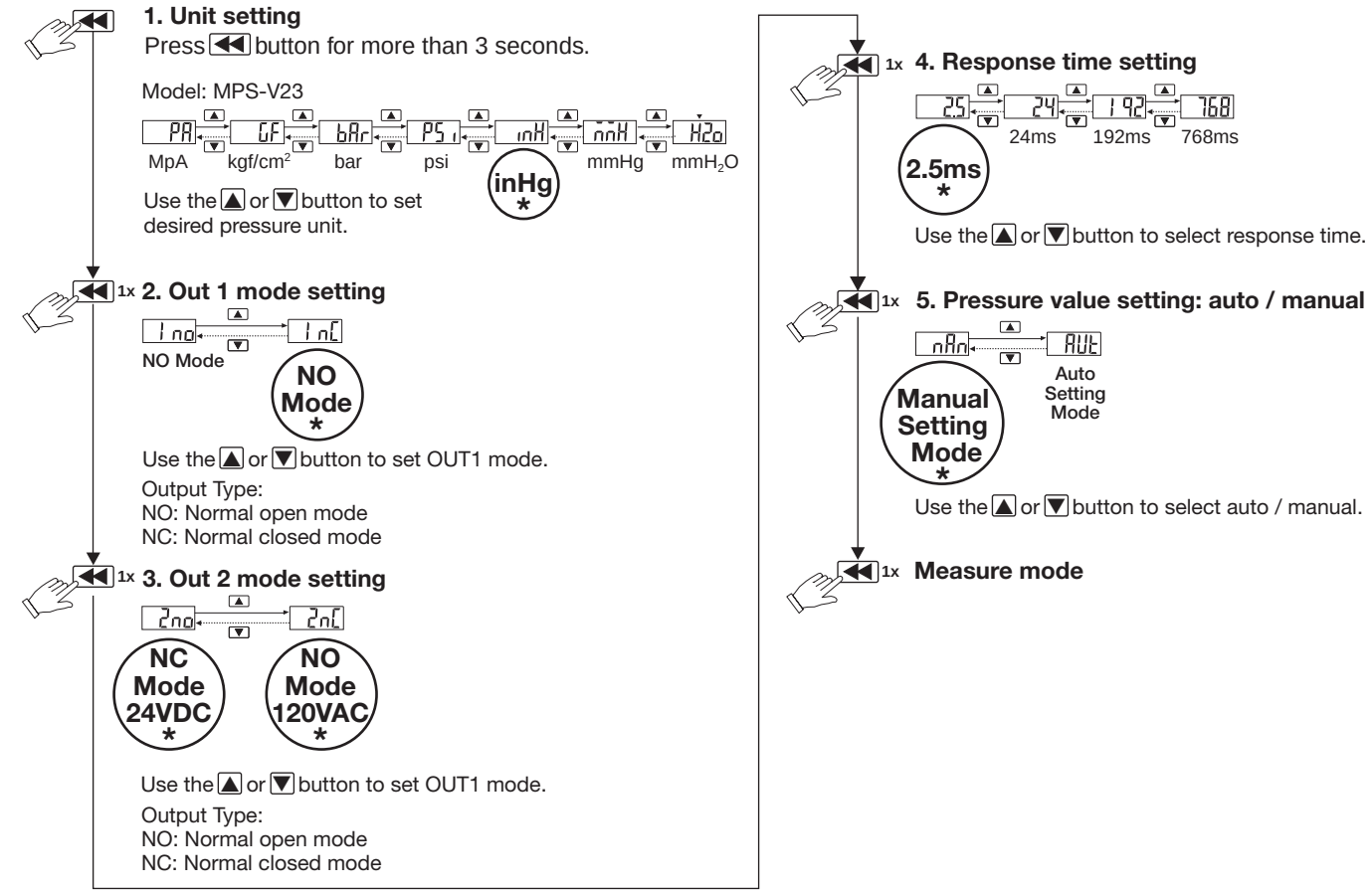

*Factory Setting

Zero point setting / the max. & min. display mode

Zero setting:

press the▼▲ button at the same time until the “00” is shown. Release the button to end zero setting.

The max. value display mode:

Press ▲ button 2 seconds to enter the max. value mode, pressure sensor will detect the max. value and keep max. value displayed.

Press ▲ button 2 seconds to return to measure mode display.

The min. value display mode:

Press ▼ button 2 seconds to enter the min. value mode, pressure sensor will detect the min. value and keep min. value displayed.

Press ▼ button 2 seconds to return to measure mode display.

Key lock / unlock mode

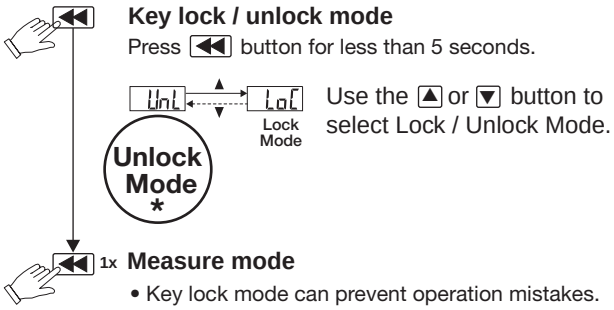

*Factory Setting

Programming Features MPS-23 1-Color Generator Mount

***For MPS-2 sensors used in previous design, see www.parker.com/pneu/sensors**

Output type

Hysteresis Mode

P1 (n1) > P2 (n2)
P3 (n3) > P4 (n4)

Output Hysteresis value can be preset.

Normal open mode

Vacuum (MPS-V23)

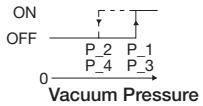

Normal close mode

Vacuum (MPS-V23)

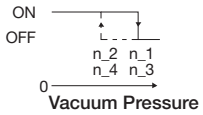

(Note)
When hysteresis mode setting is within 2 digits, if the input and pre-set pressure is quite near, pressure sensor output might cause chattering.

Window comparator Mode

P1 (n1) < P2 (n2)
P3 (n3) < P4 (n4)

Within pressure setting range, pressure sensor output can be ON or OFF.

Normal open mode

Vacuum (MPS-V23)

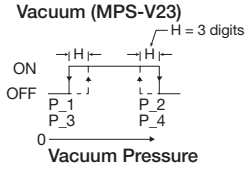

Normal close mode

Vacuum (MPS-V23)

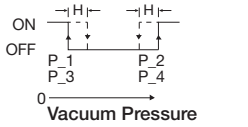

Do not use on CVX Units

Manual setting mode

The LED shows: (P_* at normal open mode and (n_*) at normal close mode. Pressure setting value is shown normally and will not lead to pressure sensor pause or stop working.

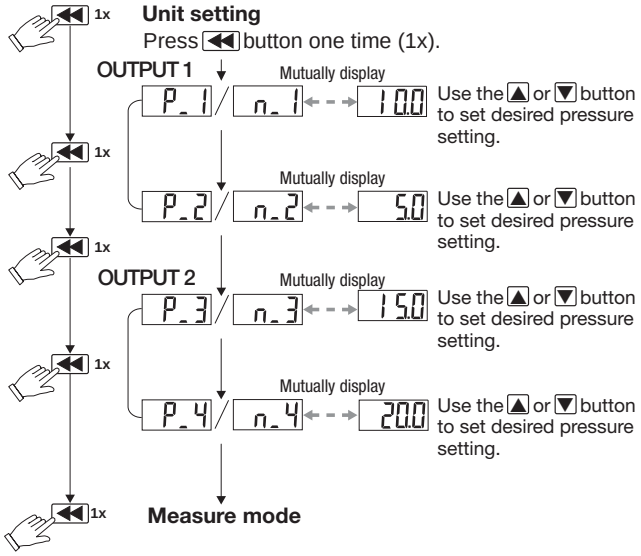

Auto setting mode
(Do not use on CVX Units)

*1. In case of without need of OUT1 pressure value setting, press ▼+▲ at the same time to enter (AP2) / (An2).
*2. In case of without need of OUT2 pressure value setting, press ▼+▲ at the same time to enter measure mode.
3. The LED shows (AP) at normal open mode and (An*) at normal closed mode.

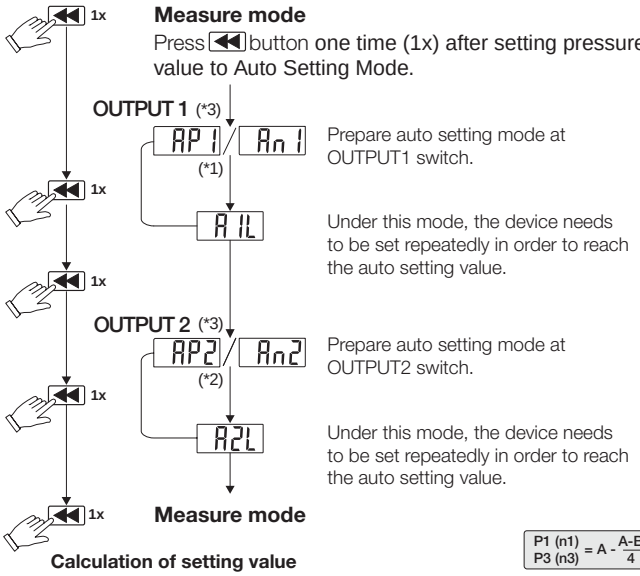

Calculation of setting value
A = The max. pressure value under auto setting mode.
B = The min. pressure value under auto setting mode.

$$\text{P1 (n1)}, \text{P3 (n3)} = A - \frac{A-B}{4}$$

$$\text{P2 (n2)}, \text{P4 (n4)} = B - \frac{A-B}{4}$$

Error messages

Error name		Display	Description	Solutions
Excess load current error	OUT1	*Er1*	Excess load current of 80 mA	Turn off power and check the cause of overload current or lower the current load under 80 mA, then restart
	OUT2	*Er2*		
Residual pressure error		*Er3*	During zero reset, ambient pressure is over ±3% F.S.	Change input pressure to ambient pressure and perform zero reset again
Applied pressure error		– – –	The applied pressure is excess the upper limit of pressure setting	Adjust the pressure within applied pressure range
		– – – –	The applied pressure is excess the lower limit of pressure setting	
System Error		*Er4*	Internal data error	Turn power off and then restart. If error condition remains, please return to factory for inspection
		Er6	Internal system error	
		Er7	Internal data error	

Notes

Pneumatic Division
Richland, Michigan 49083

Installation & Service Instructions
CVM215P

MC72 Vacuum Generators

ISSUED: September, 2011
Supersedes: None
Doc.# CVM215P, EN# 110789, Rev. 1

⚠ WARNING

To avoid unpredictable system behavior that can cause personal injury and property damage:

- **Disconnect electrical supply (when necessary) before installation, servicing, or conversion.**
- **Disconnect air supply and depressurize all air lines connected to this product before installation, servicing, or conversion.**
- **Operate within the manufacturer's specified pressure, temperature, and other conditions listed in these instructions.**
- **Medium must be moisture-free if ambient temperature is below freezing.**
- **Service according to procedures listed in these instructions.**
- **Installation, service, and conversion of these products must be performed by knowledgeable personnel who understand how pneumatic products are to be applied.**
- **After installation, servicing, or conversion, air and electrical supplies (when necessary) should be connected and the product tested for proper function and leakage. If audible leakage is present, or the product does not operate properly, do not put into use.**
- **Warnings and specifications on the product should not be covered by paint, etc. If masking is not possible, contact your local representative for replacement labels.**

Safety Guide

For omplete information on recommended application guidelines, see the Safety Guide section of Pneumatic Division catalogs or you can download the **Pneumatic Division Safety Guide** at: www.parker.com/safety

Introduction

Follow these instructions when installing, operating, or servicing the product.

⚠ Cautions

- Do not use or expose the MC72 with fluids or corrosive gases. Vacuum Venturi's are designed to be used with non-lubricated, non-corrosive, compressed air.
- Do not operate MC72 generators outside the temperature range and pressures listed in the specifications section of this instruction sheet. Regulate the compressed air to 70PSI and filtrate with a maximum 40 micron filter. Non-lubricated compressed air will maintain the life and vacuum level of the generator.

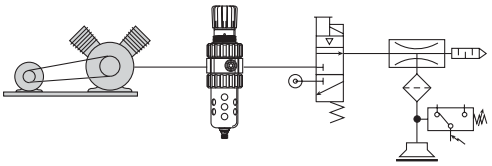

- All normally closed vacuum circuits will interrupt the air supply to the venturi during a power failure or Emergency Stop condition. As a result, the product being transferred may be dropped, possibly creating a hazard to the surrounding environment. To avoid hazardous situations during a power loss or Emergency Stop condition, consider a normally open vacuum circuit.
- Check the insulation of all lead wires after installation to avoid shorts. Properly secure all lead wires to avoid stress or repeated movement that may fray lead wires.
- Some electrical components are diode or zener diode protected. When installing solenoids and sensors, check the polarity of the component before applying power. Apply the appropriate voltage to the solenoids and sensors. Inappropriate voltage, shorts, or surges may damage the circuitry.

Normally Closed Vacuum Circuit

The Vacuum Pilot is Energized to Activate Vacuum

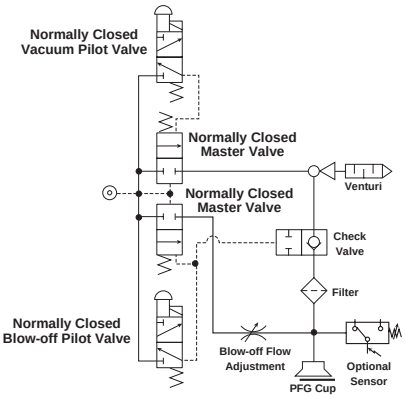

Normally Open Vacuum Circuit

The Vacuum Pilot is Energized to Deactivate Vacuum

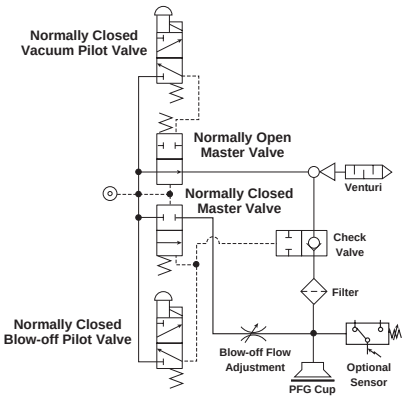

⚠ WARNING

FAILURE OR IMPROPER SELECTION OR IMPROPER USE OF THE PRODUCTS AND/OR SYSTEMS DESCRIBED HEREIN OR RELATED ITEMS CAN CAUSE DEATH, PERSONAL INJURY AND PROPERTY DAMAGE.

This document and other information from Parker Hannifin Corporation, its subsidiaries and authorized distributors provide product and/or system options for further investigation by users having technical expertise. It is important that you analyze all aspects of your application, including consequences of any failure and review the information concerning the product or systems in the current product catalog. Due to the variety of operating conditions and applications for these products or systems, the user, through its own analysis and testing, is solely responsible for making the final selection of the products and systems and assuring that all performance, safety and warning requirements of the application are met.

The products described herein, including without limitation, product features, specifications, designs, availability and pricing, are subject to change by Parker Hannifin Corporation and its subsidiaries at any time without notice.

EXTRA COPIES OF THESE INSTRUCTIONS ARE AVAILABLE FOR INCLUSION IN EQUIPMENT / MAINTENANCE MANUALS THAT UTILIZE THESE PRODUCTS. CONTACT YOUR LOCAL REPRESENTATIVE.

Specifications

Media	Non-lubricated compressed air, non-corrosive gases
Optimum operating pressure	70 PSI (5 kgf/cm^2)
Humidity	35 to 85%
Pressure port	N: 1/4 NPT female, G: 1/4 BSPP female
Vacuum port	N: 1/4 NPT female, G: 1/4 BSPP female
Operating temperature	41 to 132°F (5 to 50°C)
Material	Aluminum, Brass, NBR
Manual operation	Non-locking manual override
Electrical connection	DIN connector with LED and surge protection
Power supply	24VDC ± 10% or 110VAC
Power consumption	1.8W
Operating pressure	70 PSI (5 kgf/cm^2)
Pilot valve air supply	Normally closed
Generator weight	26.3 oz. (750g)
Manifold weight	2-Station: 24 oz. (680g), 3-Station: 31 oz. (880g), 4-Station: 38 oz. (1080g), 5-Station: 45 oz. (1280g)

Replacement Components

Item	Part number	Description
1	CVK-S	Silencer
2 thru 7	CVK-F	Filter kit
5	CVK-E	Filter element
8	PS294679BP	24VDC DIN connector / LED 8.0mm pin space
	PS294683BP	110VAC DIN connector / LED 8.0mm pin space
8,9,10	MC72-4BD	24VDC pilot Valve, 8.0mm pin space
	MC72-5BD	110VAC pilot valve, 8.0mm pin space
	P5136-M6L-DC24V	24VDC pilot valve, 9.4mm pin space
	P5136-M6L-AC110V	110VAC pilot valve, 9.4mm pin space
11	MPS-V23C-NC	MPS-V23 (NPN) option
	MPS-V23C-PC	MPS-V23 (PNP) option
	MVS-201-NC	MVS-201 (NPN) option
	MVS-201-PCP	MVS-201 (PNP) option

Accessories

Valve Cables
Connects Sensor to Vacuum
& Blow-off Release Pilot Valves..... CVK-D201G

Generator Blank Plate Kit .....CVK-BLK
(Kit Includes: Blank Plate, Screws & Gasket)

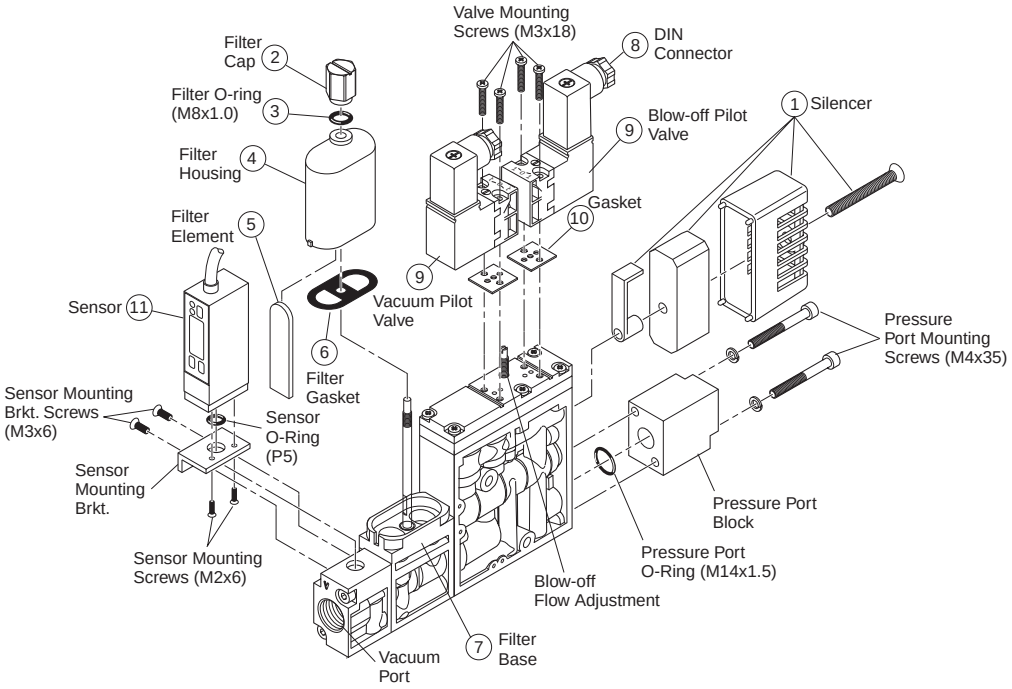

MC72 with MPS-23 Series

The “V23” sensor has 2 independent NPN or PNP outputs available for vacuum confirmation. The output response time of this sensor is less than 2 msec.

The “V23” sensor is available with an M8, 4-Pin or grommeted (2M) electrical connector. The mating M8, 4-Pin cable is not included with the MPS-23 Sensor and must be ordered separately.

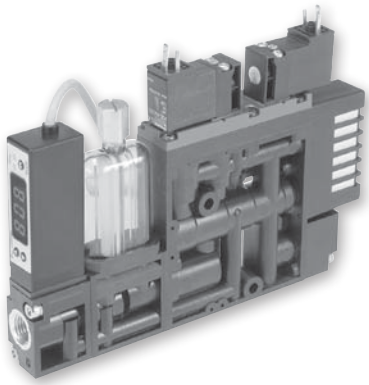

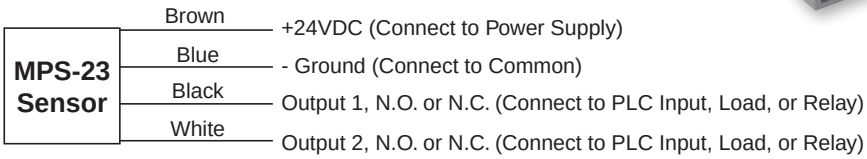

Output Adjustment

Sensor functions and outputs are programmed by touch panel.

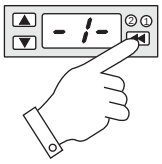

Basic System

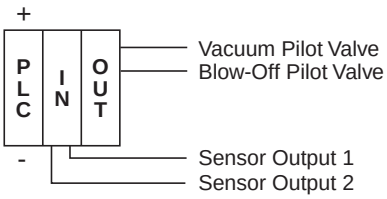

Air-Economizing System

N.C. Output 1 - Air Economizing
N.O. Output 2 - Part Present Output

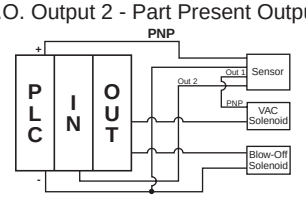

Vacuum System Programming

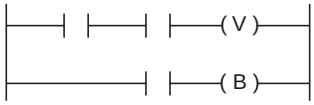

MC72 with MVS-201 Series

The “201” sensor has one output NPN or PNP for vacuum confirmation and a control output that interfaces directly with the blow-off release pilot valve. With programmable time control features and a special chip driver, the sensor automatically activates the blow-off release when the NPN or PNP input vacuum signal from the PLC is discontinued. This eliminates a PLC output to activate the blow-off release. This new technology reduces PLC output requirements by 50% and reduces installation to a simple 4 wire system. The output response of the sensor is less than 2 msec.

The “201” sensor is available with an M8, 4-Pin electrical connector. The CVK-D201G valve cable is included with the MVS-201 Sensor Option. The mating M8, 4-Pin cable must be ordered separately.

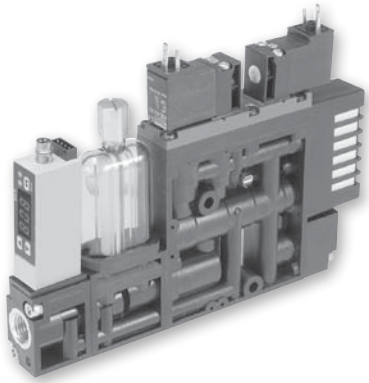

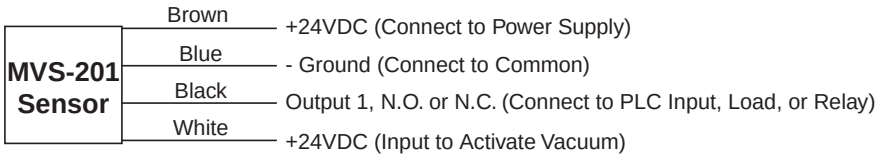

Output Adjustment

Sensor functions and outputs are programmed by touch panel.

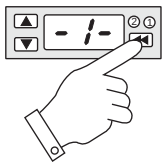

Basic System with 201 Sensor

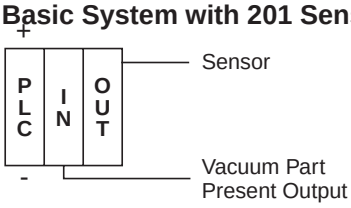

Vacuum System Programming

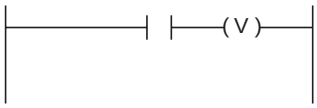

Generator

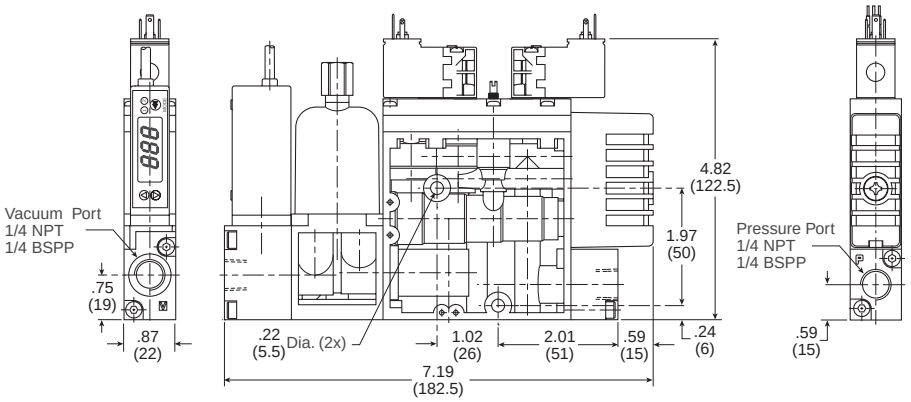

Manifold

3-Station manifold shown

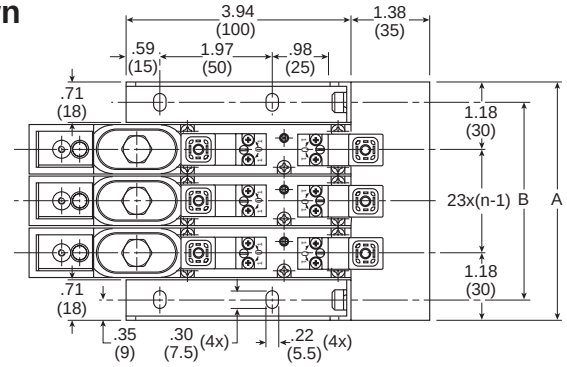

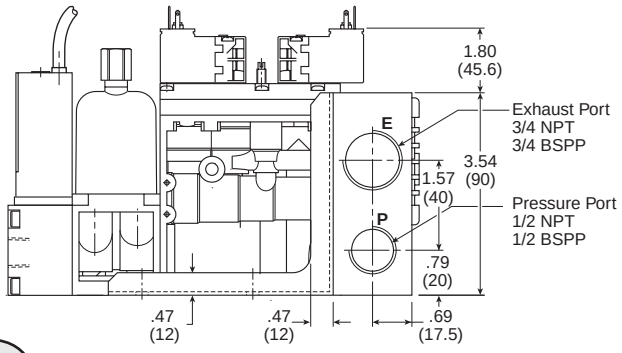

Manifold assembly

Remove Pressure Port Block and Silencer Assembly. Use existing o-rings and manifold mounting screws to secure the M72 unit to the CVK manifold.

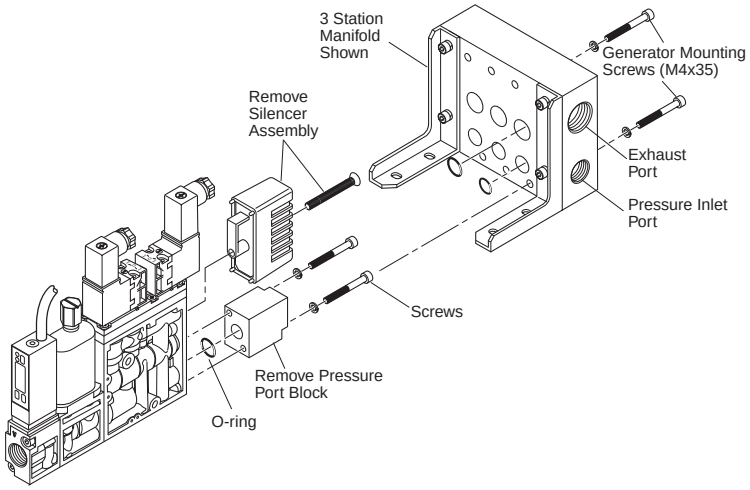

Pneumatic Division
Richland, Michigan 49083

Installation & Service Instructions
CVM216P

CVX0260B Design B

ISSUED: October, 2011
Supersedes: None
Doc.# CVM216P, EN# 110680, Rev. 1

⚠ WARNING

To avoid unpredictable system behavior that can cause personal injury and property damage:

- **Disconnect electrical supply (when necessary) before installation, servicing, or conversion.**
- **Disconnect air supply and depressurize all air lines connected to this product before installation, servicing, or conversion.**
- **Operate within the manufacturer's specified pressure, temperature, and other conditions listed in these instructions.**
- **Medium must be moisture-free if ambient temperature is below freezing.**
- **Service according to procedures listed in these instructions.**
- **Installation, service, and conversion of these products must be performed by knowledgeable personnel who understand how pneumatic products are to be applied.**
- **After installation, servicing, or conversion, air and electrical supplies (when necessary) should be connected and the product tested for proper function and leakage. If audible leakage is present, or the product does not operate properly, do not put into use.**
- **Warnings and specifications on the product should not be covered by paint, etc. If masking is not possible, contact your local representative for replacement labels.**

Safety Guide

For omplete information on recommended application guidelines, see the Safety Guide section of Pneumatic Division catalogs or you can download the **Pneumatic Division Safety Guide** at: www.parker.com/safety

Introduction

Follow these instructions when installing, operating, or servicing the product.

⚠ Cautions

- The CVX0260B does not require lubrication to function like other pneumatic components.
- The CVX0260B functions efficiently at 70 PSI while in operation. Regulate the inlet air pressure to 70 PSI during operations.
- Inlet compressed air levels below 70 PSI will yield lower vacuum levels and could effect the overall performance of the system.
- Filtrate the inlet air to protect the CVX0260B against contaminating matter typically found in compressed air systems (i.e. rust, water, compressor oil, or other foreign particles). A standard 40 micron filter is recommended.
- The CVX0260B inlet compressed air must be filtered, regulated, and periodically maintenance to insure maximum operating performance and warranty.
- The air economizing functions and check valves require proper fittings and suction cups to prevent vacuum leakage. The vacuum ports are 3/8" G or 3/8" NPT female threads and require appropriate fittings to properly seal the systems. For NPT fittings, use a dry seal or tape to seal the fittings throughout the system.
- Primary vacuum filtration is always recommended between the cups and the vacuum ports of the generator. Collection of particles and other matter from the work piece will reduce the maximum vacuum level of the unit over a period of use. The frequency of the filter maintenance will vary with each environment and application.
- Each CVX0260B incorporates a small filter housed on the body to protect the internal components of the generator. Additional maintenance of this filter will also vary with each environment and application.

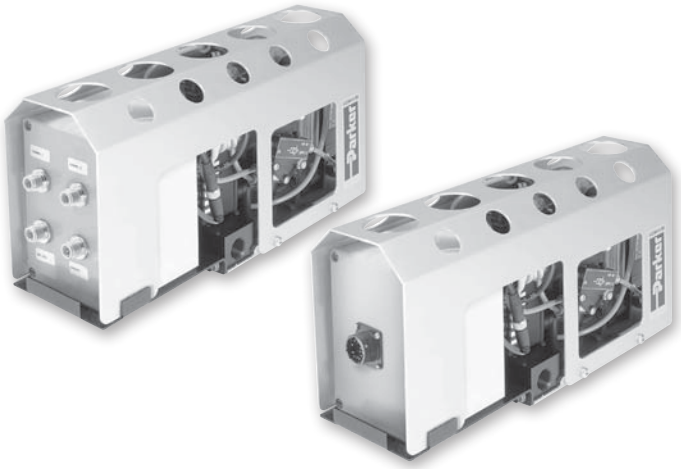

CVX0260B with M12 Connectors & M18 Connector

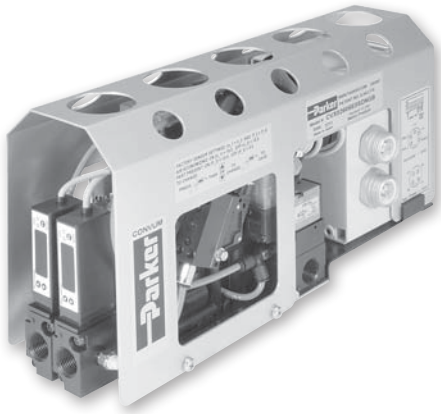

CVX0260B with DeviceNET

⚠ WARNING

FAILURE OR IMPROPER SELECTION OR IMPROPER USE OF THE PRODUCTS AND/OR SYSTEMS DESCRIBED HEREIN OR RELATED ITEMS CAN CAUSE DEATH, PERSONAL INJURY AND PROPERTY DAMAGE.

This document and other information from Parker Hannifin Corporation, its subsidiaries and authorized distributors provide product and/or system options for further investigation by users having technical expertise. It is important that you analyze all aspects of your application, including consequences of any failure and review the information concerning the product or systems in the current product catalog. Due to the variety of operating conditions and applications for these products or systems, the user, through its own analysis and testing, is solely responsible for making the final selection of the products and systems and assuring that all performance, safety and warning requirements of the application are met.

The products described herein, including without limitation, product features, specifications, designs, availability and pricing, are subject to change by Parker Hannifin Corporation and its subsidiaries at any time without notice.

EXTRA COPIES OF THESE INSTRUCTIONS ARE AVAILABLE FOR INCLUSION IN EQUIPMENT / MAINTENANCE MANUALS THAT UTILIZE THESE PRODUCTS. CONTACT YOUR LOCAL REPRESENTATIVE.

Forward

The CVX0260B is a MC72 package with the ultimate air circuit for all of your material handling systems. The CVX0260B is ideal for non-porous applications that require fast response of large vacuum and blow-off release flow rates, Emergency Stop Management System, optional air-economizing features, and device net communication. The Emergency Stop Management System can operate a normally closed system during an emergency event or power failure situation. Typically, with a normally closed air circuit, the user controls the vacuum with a command signal. During an emergency event or power failure event, the vacuum command signal is lost, but, the system can detect the presence of a part and continue to operate in the vacuum mode. If the system detects that a part is not present, each vacuum channel, operating independently, will close to eliminate any unnecessary air consumption. Additional air economizing features are controlled by the sensor outputs to make this unit the ultimate weapon against air consumption.

There are 4 separate states of air logic: vacuum, blow-off, idle, and EOS. The air circuit in Figure 1 illustrates a basic normally closed unit with the Emergency Stop operating system. Vacuum is created when a high signal is sent to Vacuum Pilot Valve **(1)**. The output of the Vacuum Sensor **(2)**, controls the vacuum level and air economizing function by feedback to the Vacuum Solenoid Valve **(1)**. The Check Valve **(3)** maintains the vacuum level until the Blow-off Pilot Valve **(4)** is activated to release or the hysteresis value of Sensor **(2)** is reached to restore the original vacuum level. The Emergency Stop operating system **(5)** is activated by an emergency event or power failure.

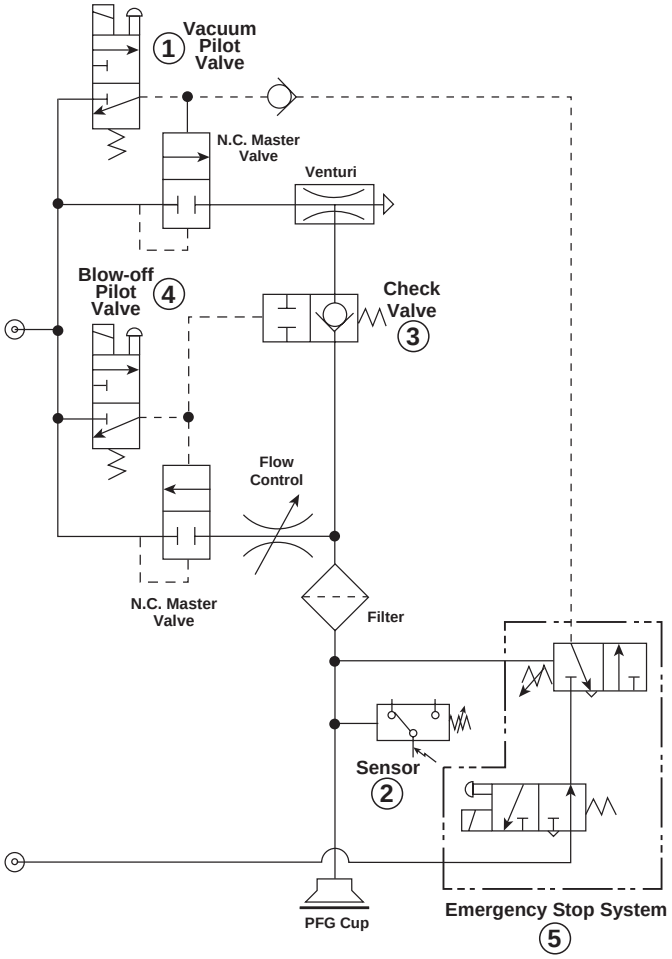

Figure 1

Specifications

CVX0260B Specifications

Media	Non-lubricated Dry Air
Pressure Port	3/8" G, 3/8" NPT Through Port
Vacuum Ports	2 Individual Vacuum Channels 3/8" G Ports or 3/8" NPT
Operating Temperature	32° to 122°F (0° to 50°C)
Operating Pressure	70 PSI
Vacuum Filtration	130 µm
Noise Level	72dB
Air Consumption	10.41 SCFM
Maximum Vacuum Level	-26.2 inHg

Control Valve Specifications

3-Way	Pilot Valves
Manual Operation	Manual Overrides Available
Electrical Connector	DIN type w/LED and Diode Protection, IP65 Rating
Power Supply	24VDC ± 10%
Power Consumption	1.2W
Pressure	70 PSI

Sensor Specifications

Media	Non-lubricated Dry Air
Operating Temperature	32° to 122°F (0° to 50°C)
Humidity	40 to 85% R.H.
Electrical Connection	4-Pin, M8 Connector
Power Supply	10.8 to 30 VDC, Ripple Vp-p 10% Max. Diode Protection
Display	3-Digit, 7-Segment LED
Units of Measure	inHg, mmHg, bar, kPa, Selectable
Display Resolution	0.1 kPa, 0.001 bar, 1 mmHg, 0.1 inHg Selectable
2-Switch Outputs	Individually Selectable N.O or N.C., 80mA, 30V with Overcurrent Protection, LED Status
Operating Mode	Hysteresis Adjustable
Response Time	2ms
Repeatability	± 0.2% F.S.
General Protection	CE Rated
Current Consumption	<55mA

Emergency Stop Operating System Specifications

Two-Way Valve	Diaphragm Actuated, Pneumatic Output
Media	Non-lubricated Air, Dry Air
Operating Range	-4.5 to -25 inHg Vacuum
Pressure Operating Range	70 PSI
Accuracy	± 1.5 inHg
Port Connection	M5 Female
Air Supply	Normally Closed

Emergency Stop Electrical Valve Specifications

3-Way Valve	Direct Acting
Media	Air
Operating Range	70 PSI
Electrical Connection	DIN Connector w/LED and Diode Protection, IP65
Operating Voltage	24VDC ± 10%
Power Consumption	1.8W
Current	0.075A

Model Number Index

(Bold Items are Stocked)

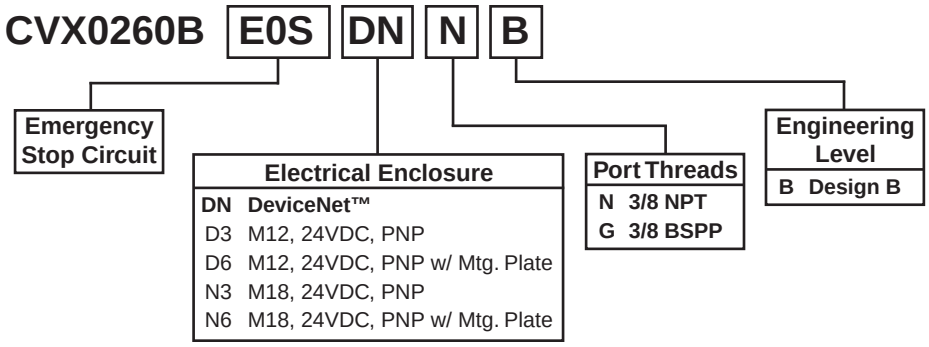

System Logic

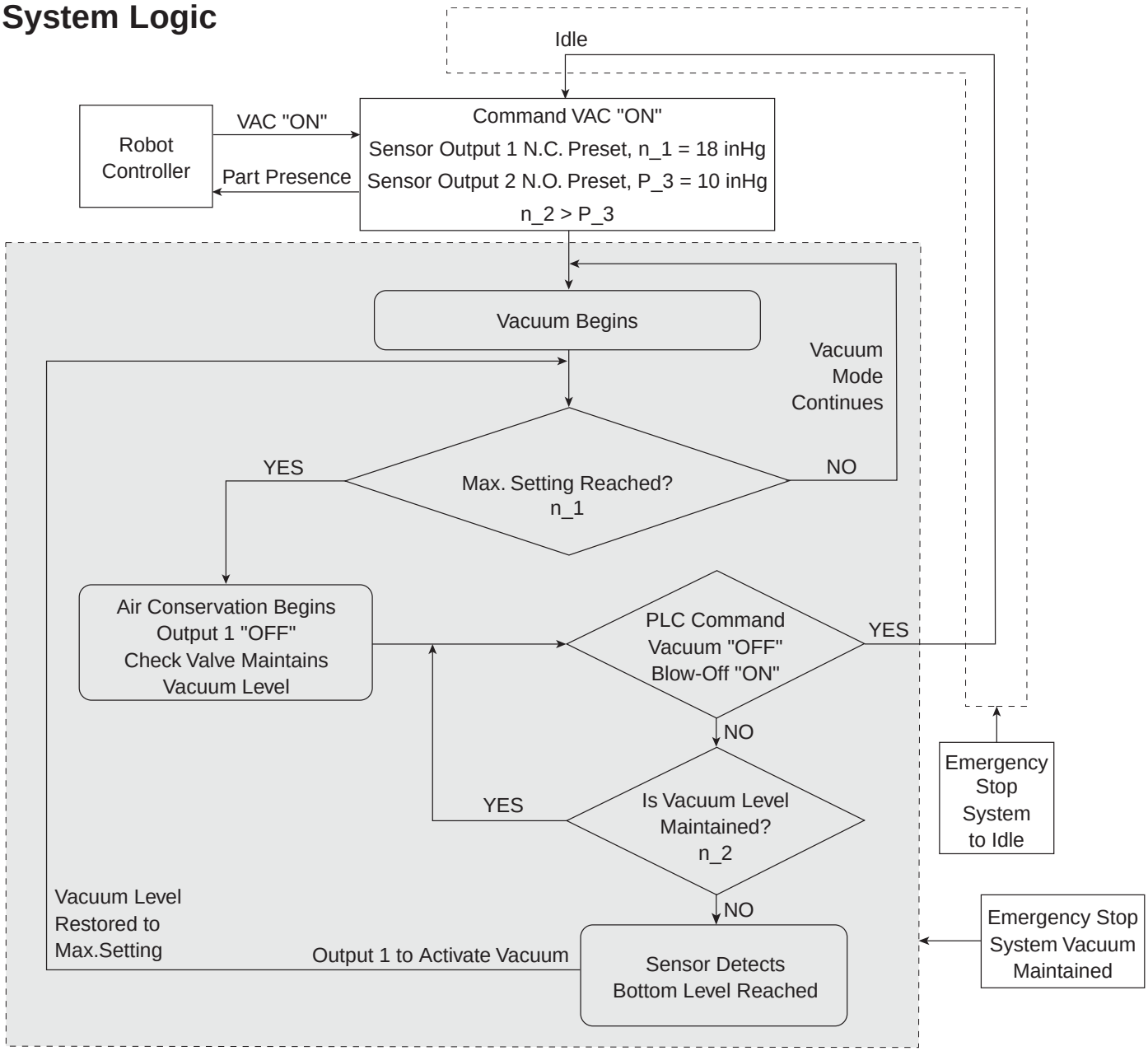

The above flow chart illustrates the basic operation of the vacuum system. Vacuum is created when the unit receives a command vacuum “ON”. The vacuum sensor output will turn off the vacuum solenoid and begin the Air Conservation Mode with the built-in check valve at the set vacuum and hysteresis levels. The unit will release the part by command blow-off “ON”. If an emergency event or power failure occurs any time the system is in the shaded area, vacuum will be maintained to hold the workpiece. If an emergency event or power failure occurs, any time the system operations are at idle or during blow-off “ON”, the system will remain or return to the idle state.

Sensors

The Convum MPS-23 sensor with display has two (2) individual switch outputs with hysteresis setting for feedback and controls.

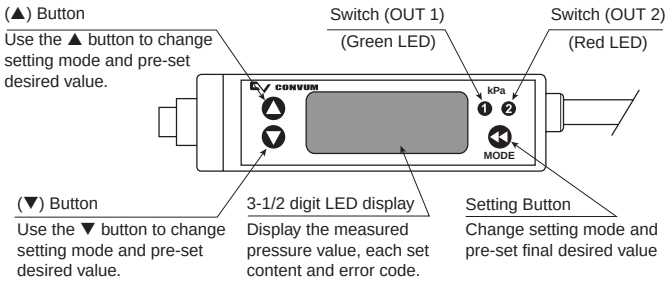

Factory Settings

OUT 1 AIR ECONOMIZING	OUT 2 PART PRESENCE
N.C. Below n_1, N.O. Above n_1	N.O. Below P_3, N.C. Above P_3
n_1, Switch Point 18 inHg	P_3, Switch Point 10 inHg
n_2, Hysteresis 15.5 inHg Hysteresis Mode	P_4, Hysteresis 9.5 inHg Hysteresis Mode
Units of Measure; inHg	

Sensor settings must be set so that n_1 > n_2 and P_3 > P_4.

AIR ECONOMIZING SWITCH POINT IS FACTORY SET AT 18 inHg. ALL SYSTEM DESIGN PARAMETERS MUST BE ANALYZED BEFORE CHANGING "n_1". Air Economizing function will be turned off by setting "n_1" above the maximum vacuum pressure that the system can create.

It may be necessary to adjust the part presence Output 2 to avoid false signals when vacuum is falsely created by tubing or fitting flow restrictions in an open system.

Emergency or Power Failure Operating System (EOS)

(Patent Pending)

The Emergency Operating System is designed to maintain and continue the current operation mode of the vacuum generator when an emergency or power failure occurs by an adjustable or fixed vacuum level on the mechanical pressure sensor.

Blow-off Adjustment

The volume of air during the blow-off function to release the workpiece can be set by turning the needle adjustment up or down. Access the needle adjustment through opening of protective cover (topside).

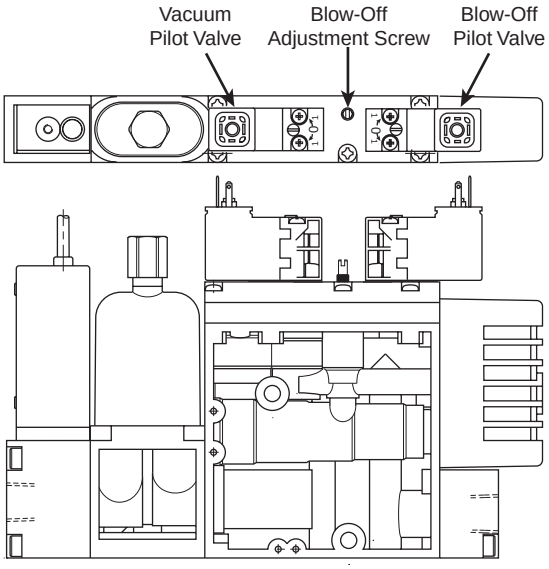

Air Economizing and Vacuum Level Control

The vacuum sensor Output 1 is configured normally closed and turns off the vacuum pilot valve. This controlled vacuum level is programmed on the sensor by adjusting "n_1" or Output 1. When the desired vacuum level is reached, the system begins the air-economizing function by closing the vacuum valve air supply and allowing the internal check valve to maintain the vacuum level until the blow-off solenoid valve is activated to release the part or the hysteresis value (programmed "n_2") of Output 1 is reached to restore the vacuum to the original desired level.

Operation Mode

MODES	VACUUM ON	VACUUM OFF	BLOW-OFF	EOS
Normal Conditions	Air Economizing between 18-15.5 inHg	Idle	Blow-off On Blow-off Idle	EOS Off
Emergency or Power Failure	Vacuum On ↓ ↓ Vacuum On	Idle	Blow-off On Idle ↓ ↓ Idle Idle	EOS On
Restore Power	Vacuum On Air Economizing Function Resumes	Idle	Idle	EOS Off

Replacement Components

Item	Part Number	Description
1	CVK-S	Silencer
2 thru 7	CVK-F	Filter Kit
5	CVK-E	Filter Element
8, 9, 10	MC72-4PD	Pilot Valve Kit
11	3PB119-00-L-3	CVX E-Stop Valve
12	CVM99821	Diaphragm Valve
13	ENC244	Cover (Not Shown)
14	PSCVXDNB PSCVXD3B PSCVXN3B	DeviceNet M12 Discrete 18-Pin Discrete
15	MPS-V23C-NC	NPN Sensor

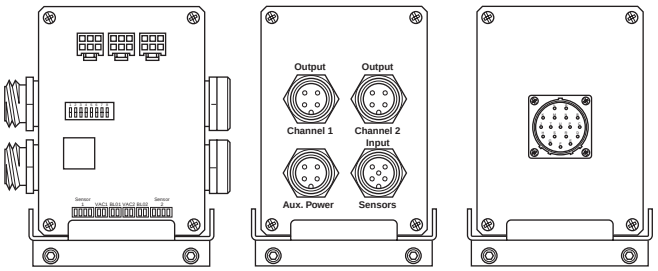

PSCVXDNB PSCVXD3B PSCVXN3B

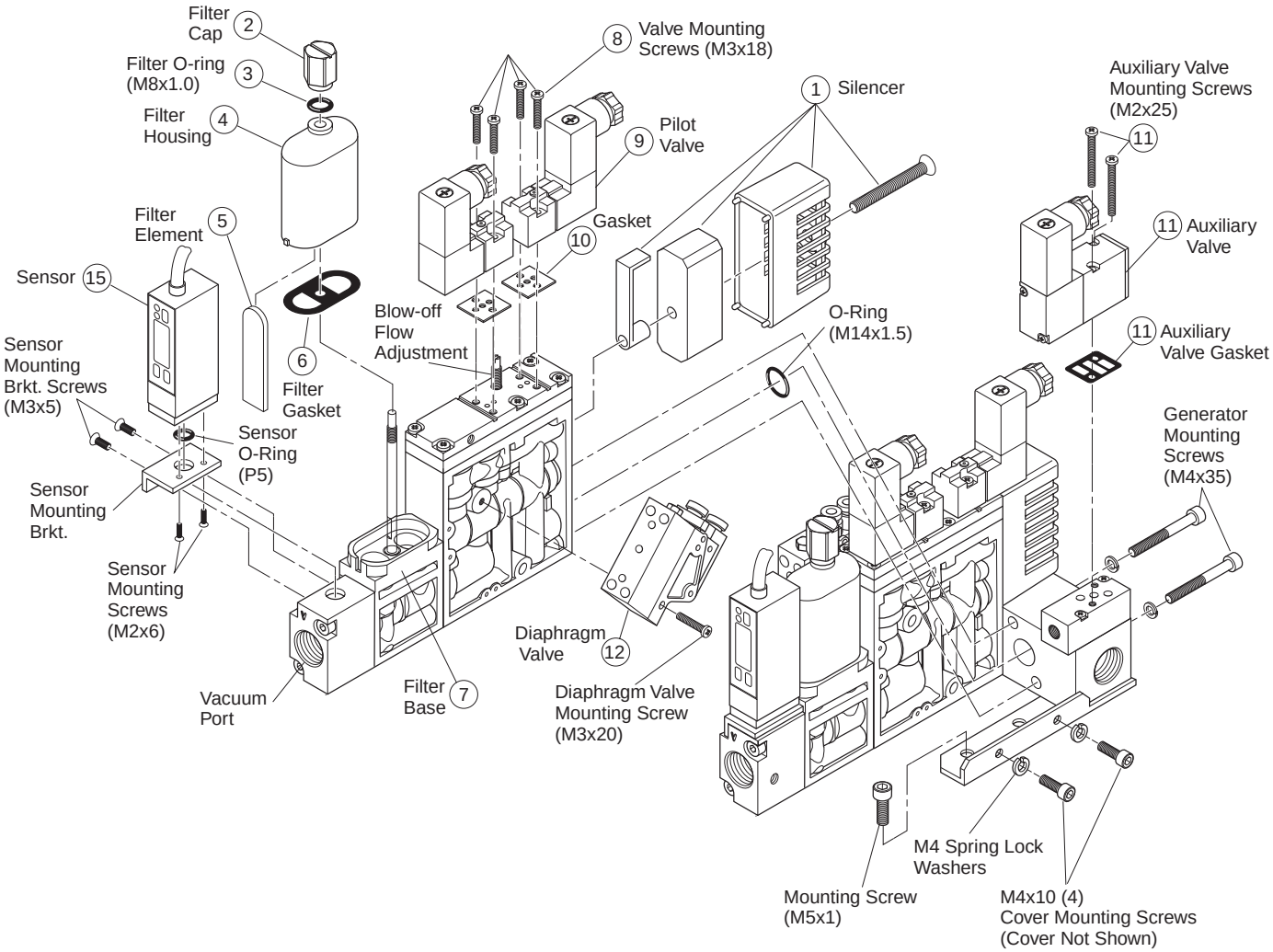

Scheduled Maintenance

Filters – Periodic maintenance of the secondary vacuum filter is necessary. The frequency of maintenance depends on the environment and application. As the filter collects product from the environment the maximum vacuum level potential and response time may vary.

Silencer – Periodic maintenance of the silencer may be required. The frequency of maintenance depends on the environment and condition of the air supply.

Contents

The CVX0260B is supplied with four (4) M5 x 1 Socket Head Cap Screws to secure the unit to the optional mounting plate.

CVX0260BE0SDN**

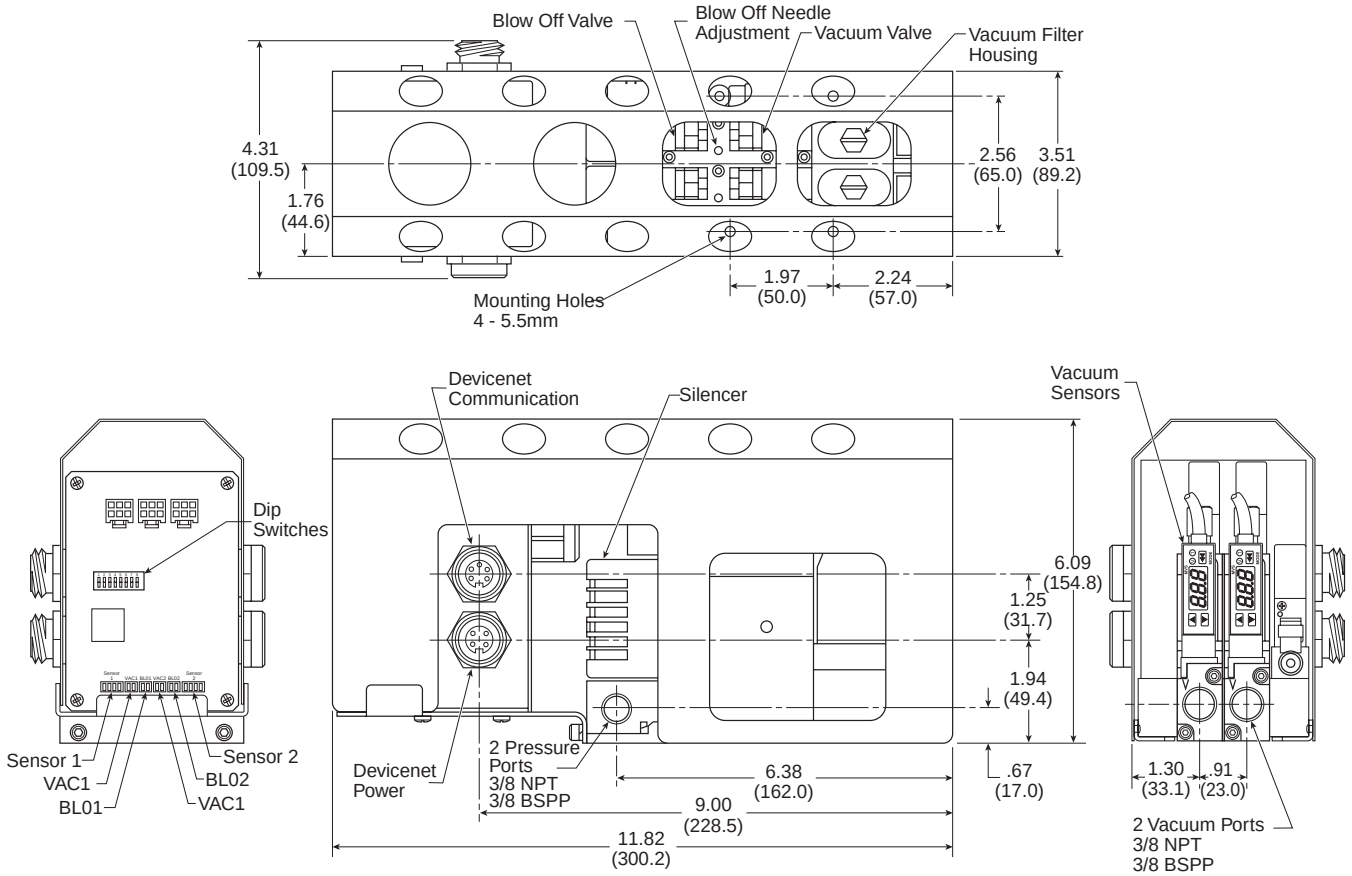

DeviceNet Kit PSCVXDNB

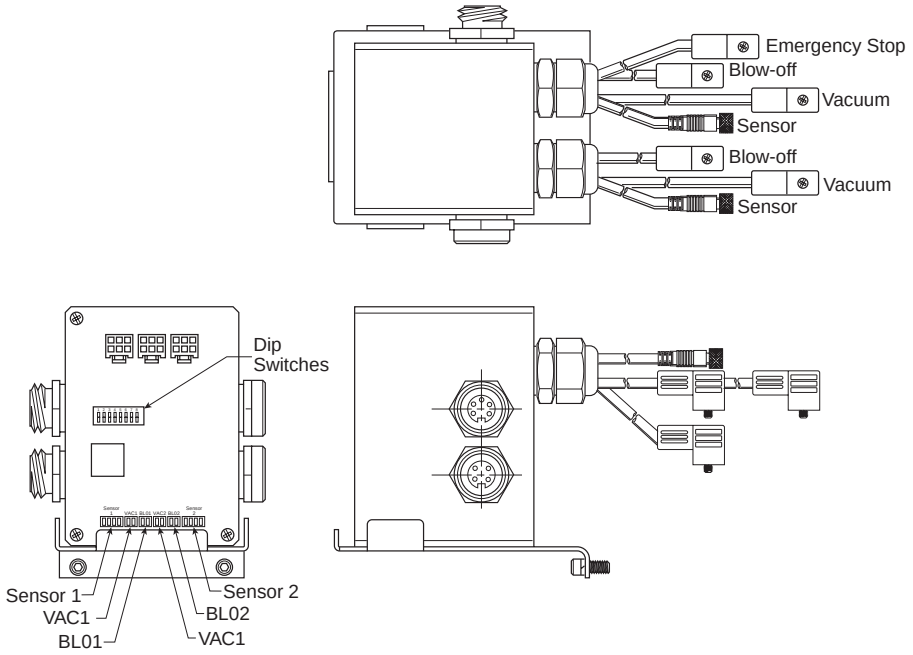

DeviceNet™

The DeviceNet™ power bus supplies power for the DeviceNet circuitry and the two sensors. The auxiliary power bus provides power for the vacuum solenoids and blow-off solenoids. *No external PLC programming is required for Air Economizing Functions because this function is built into the electrical unit.* The following are power requirements for the DeviceNet circuitry. Voltage Range: 12.5 to 24VDC; Current 150 mA.

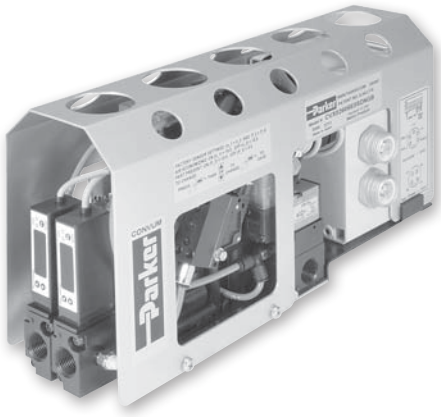

DeviceNet™ Bus Connectors
5-Pin Mini-Style

DeviceNet Connections

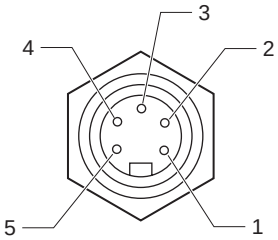

Male (Pins)

1.) Drain
2.) V+
3.) V-
4.) CAN-H
5.) CAN-L

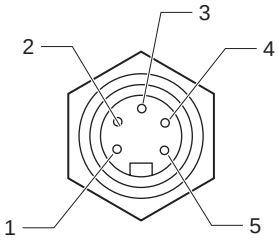

Female (Sockets)

24VDC Power Connections

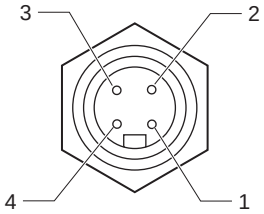

Male (Pins)

1.) 24VDC
2.) Not Used
3.) Not Used
4.) Common

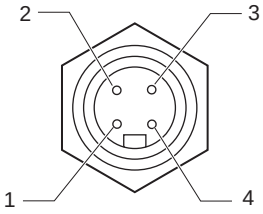

Female (Sockets)

I/O Data Table

Input Data Table

	Bit							
	0	1	2	3	4	5	6	7
Input Byte 1	CH1 Part Presence	CH2 Part Presence	Not Used	Not Used	Not Used	Not Used	Not Used	Not Used

Output Data Table

	Bit							
	0	1	2	3	4	5	6	7
Input Byte 1	CH1 Vacuum	CH1 Blow-Off	CH2 Vacuum	CH2 Blow-Off	Not Used	Not Used	Not Used	Not Used

DeviceNet™ Information

General Description

The Convum Vacuum Generator operates as a Group II Only slave on the DeviceNet™ network. The unit supports the following types of messaging: Explicit, Polled, Cyclic, Change of State, and Bit Strode. It does not support the Explicit Unconnected Message Manager (UCMM).

The Cyclic, Change of State, and Bit Strobe types of messaging were incorporated into the product beginning with Firmware Revision No 4.23 or later. This can be verified by the label on the microcontroller on the p.c. board.

The unit has four (4) digital outputs and two (2) digital inputs. The digital outputs control two (2) vacuum states and two (2) blow-off states. The two (2) digital inputs are two-part present indications (one for each channel) and an auxiliary power voltage indicator.

The DeviceNet™ power bus supplies power for the DeviceNet™ circuitry and the two (2) Convum sensors. The auxiliary power bus provides power for the vacuum solenoids, the blow-off solenoids, and the solenoid for the Emergency Stop circuit. The following are the power requirements for the DeviceNet™ circuitry.

Voltage Range . 12.5 to 24VDC

Current.....150Ma

The following is the product information for the DeviceNet™ interface:

Vendor ID (VendCode) 510

Device Type (ProdType).....7

Product Code (ProdCode).....1

Bytes Produced (polled).....1

Bytes Consumed (polled).....1

The following are the power requirements for the circuitry on the auxiliary power bus:

Voltage Range..... 24VDC

Current..... 400Ma max.

MAC ID Settings

The MAC ID is set with the lowest six (6) positions on the 8-Pin DIP switch located on the p.c. board. The least significant digit of the setting is on position 1 and the most significant digit is on position 6. To have a switch be read as a “1”, set it to the “ON” position. To have the switch be read as a “0”, set it to the “OFF” position.

Baud Rate Settings

The baud rate is set with the two highest positions on the 8-Pin DIP switch. The lower digit is position 7 and the higher digit is position 8. To have a switch be read as a “1”, set it to the “ON” position. To have the switch be read as a “0”, set it to the “OFF” position. The following are the DIP switch settings for the baud rate:

Switch Settings (7 and 8)	Baud Rate
00	125k
01	250k*
10	500k
11	Invalid

* Factory Preset 250k

Poll Command and Digital Outputs

The unit has four (4) outputs. The outputs are bitmapped to the lower nibble of the byte. The outputs are turned ON by sending a “1” to their respective bits, and they are turned OFF by sending a “0” to their respective bits. The following are the polled data bytes to actuate the four outputs:

Polled Command Date	Action
0x01	Turns ON Channel 1 Vacuum
0x02	Turns ON Channel 1 Blow-off
0x04	Turns ON Channel 2 Vacuum
0x08	Turns ON Channel 2 Blow-off

Poll Response and Digital Inputs

Inputs indicate that a part is present on either of the two (2) channels. The inputs are bit mapped to the lower nibble of the byte in the polled response. The following are the feedback signal meanings for the two (2) inputs:

Polled Response Date	Interpretation
0x01	Channel 1, Part Present
0x02	Channel 2, Part Present

Explicit Messaging and Digital Outputs

The outputs are accessed through the Discrete Output Point Object, Class Code 0x09.

Output	Instance No.	Attribute
Vacuum 1	1	3
Blow-off 1	2	3
Vacuum 2	3	3
Blow-off 2	4	3

Explicit Messaging and Digital Inputs

The inputs are also accessed through the Discrete Input Object, Class Code 0x08, with Explicit messaging.

Input	Instance No.	Attribute	Explicit Response
Channel 1, Part Present	1	3	0x01
Channel 2, Part Present	2	3	0x01

Change of State Messaging

In this mode of messaging, date is sent to the Master when the Slave device inputs change. These device inputs are the two-part present indications. Change of State messaging can send acknowledged or unacknowledged date.

For acknowledged date, the Acknowledge Timer in the Acknowledge Handler Object (Class Code 0x2B, Attribute 1) sets the time to wait before resending the data. The range of values for this attribute is 1 to 65,635ms. Zero is invalid. The default value is 16ms.

A Slave can be allocated for Cyclic or Change of State but not both. Change of State can function with Bit-Strobed and Polled messaging.

Cyclic Messaging

In this mode of messaging, the data from the Slave device inputs is sent back to the master at a pre-configured periodic time interval. These Slave device inputs are the two-part present indications and the auxiliary power indication. The Cyclic messaging also can be acknowledged or unacknowledged.

The period of the messaging interval is controlled by the expected packet rate (EPR) which can be adjusted in millisecond increments.

Bit-Strobe Messaging

A master sends a Bit-Strobe command to each Slave whose MAC ID is on the Master's Scan List In the command there is one bit of output data for each Slave; therefore, the command is 64 bits or 8 bytes long.

To the master, each Slave returns a Bit-Strobe response which can contain up to 8 bytes of input data and / or status information. The format of the Bit-Strobe response for the Convum / Parker DeviceNet™ is the same as the Poll response.

Factory DIP Switch Settings

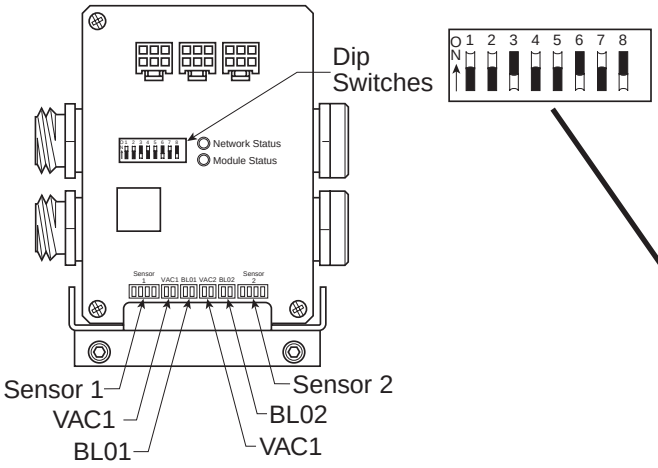

Module Status Lights (LEDs)

Indicator	Function	
Network Status	Off	No power applied to module or module not on-line
	Steady Green	Normal Operation: on-line and established connection(s)
	Flashing Green	Device on-line, waiting for scanner to establish connection
	Steady Red	Failed communication: duplicate address or bus-off
	Flashing Red	One or more I/O connections are in the Timed-out state or output fault
Module Status	Off	No power applied to module at bus or power connector
	Steady Green	Normal Operation
	Flashing Red	Low or No Bus Power (VDC+)

*Device**Net**™* MAC ID	# 1	# 2	# 3	# 4	# 5	# 6
0	OFF	OFF	OFF	OFF	OFF	OFF
1	ON	OFF	OFF	OFF	OFF	OFF
2	OFF	ON	OFF	OFF	OFF	OFF
3	ON	ON	OFF	OFF	OFF	OFF
4	OFF	OFF	ON	OFF	OFF	OFF
5	ON	OFF	ON	OFF	OFF	OFF
6	OFF	ON	ON	OFF	OFF	OFF
7	ON	ON	ON	OFF	OFF	OFF
8	OFF	OFF	OFF	ON	OFF	OFF
9	ON	OFF	OFF	ON	OFF	OFF
10	OFF	ON	OFF	ON	OFF	OFF
11	ON	ON	OFF	ON	OFF	OFF
12	OFF	OFF	ON	ON	OFF	OFF
13	ON	OFF	ON	ON	OFF	OFF
14	OFF	ON	ON	ON	OFF	OFF
15	ON	ON	ON	ON	OFF	OFF
16	OFF	OFF	OFF	OFF	ON	OFF
17	ON	OFF	OFF	OFF	ON	OFF
18	OFF	ON	OFF	OFF	ON	OFF
19	ON	ON	OFF	OFF	ON	OFF
20	OFF	OFF	ON	OFF	ON	OFF
21	ON	OFF	ON	OFF	ON	OFF
22	OFF	ON	ON	OFF	ON	OFF
23	ON	ON	ON	OFF	ON	OFF
24	OFF	OFF	OFF	ON	ON	OFF
25	ON	OFF	OFF	ON	ON	OFF
26	OFF	ON	OFF	ON	ON	OFF
27	ON	ON	OFF	ON	ON	OFF
28	OFF	OFF	ON	ON	ON	OFF
29	ON	OFF	ON	ON	ON	OFF
30	OFF	ON	ON	ON	ON	OFF
31	ON	ON	ON	ON	ON	OFF
32	OFF	OFF	OFF	OFF	OFF	ON
33	ON	OFF	OFF	OFF	OFF	ON
34	OFF	ON	OFF	OFF	OFF	ON
35	ON	ON	OFF	OFF	OFF	ON
36*	**OFF**	**OFF**	**ON**	**OFF**	**OFF**	**ON**
37	ON	OFF	ON	OFF	OFF	ON
38	OFF	ON	ON	OFF	OFF	ON
39	ON	ON	ON	OFF	OFF	ON
40	OFF	OFF	OFF	ON	OFF	ON
41	ON	OFF	OFF	ON	OFF	ON
42	OFF	ON	OFF	ON	OFF	ON
43	ON	ON	OFF	ON	OFF	ON
44	OFF	OFF	ON	ON	OFF	ON
45	ON	OFF	ON	ON	OFF	ON
46	OFF	ON	ON	ON	OFF	ON
47	ON	ON	ON	ON	OFF	ON
48	OFF	OFF	OFF	OFF	ON	ON
49	ON	OFF	OFF	OFF	ON	ON
50	OFF	ON	OFF	OFF	ON	ON
51	ON	ON	OFF	OFF	ON	ON
52	OFF	OFF	ON	OFF	ON	ON
53	ON	OFF	ON	OFF	ON	ON
54	OFF	ON	ON	OFF	ON	ON
55	ON	ON	ON	OFF	ON	ON
56	OFF	OFF	OFF	ON	ON	ON
57	ON	OFF	OFF	ON	ON	ON
58	OFF	ON	OFF	ON	ON	ON
59	ON	ON	OFF	ON	ON	ON
60	OFF	OFF	ON	ON	ON	ON
61	ON	OFF	ON	ON	ON	ON
62	OFF	ON	ON	ON	ON	ON
63	ON	ON	ON	ON	ON	ON

* Factory Preset

CVX0260BE0S***B

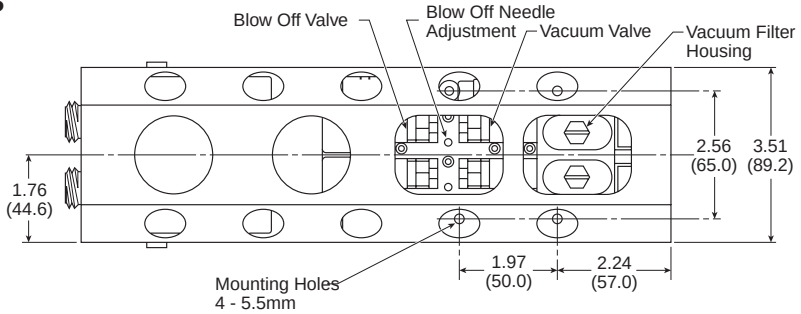

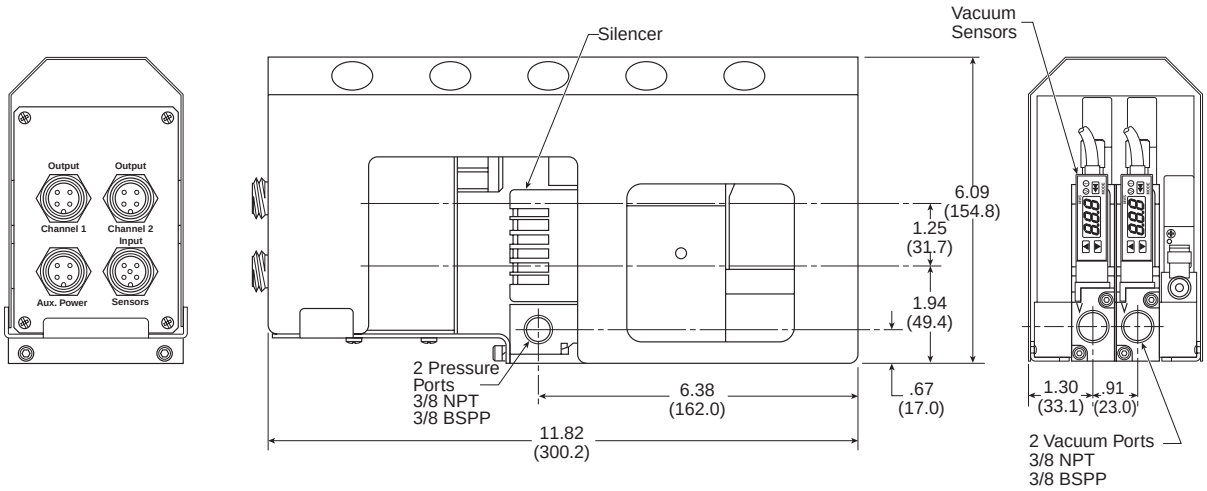

Optional Mounting Plate

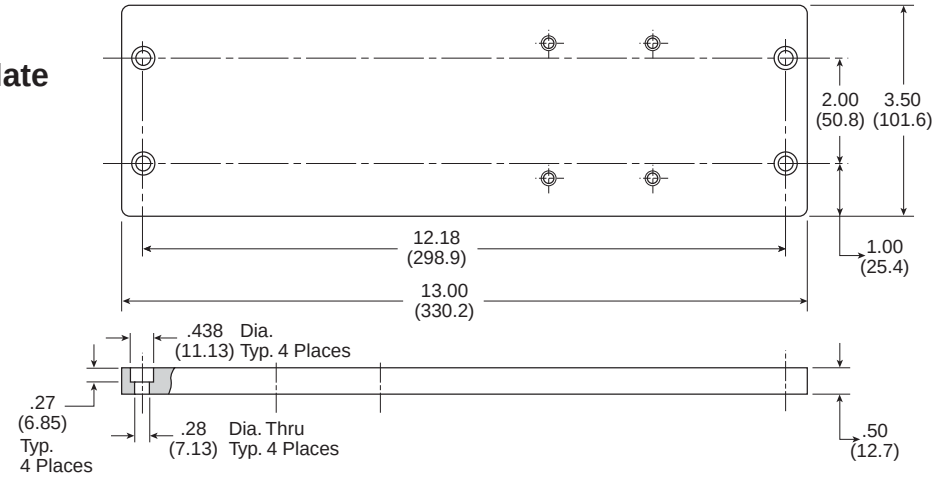

Discrete Kits
PSCVXD3B - M12, 24VDC
PSCVXN3B - M18, 24VDC

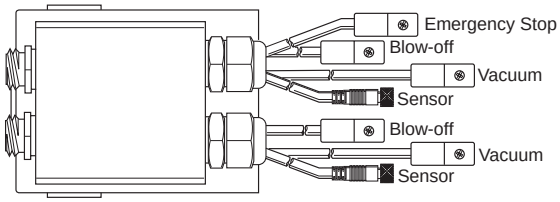

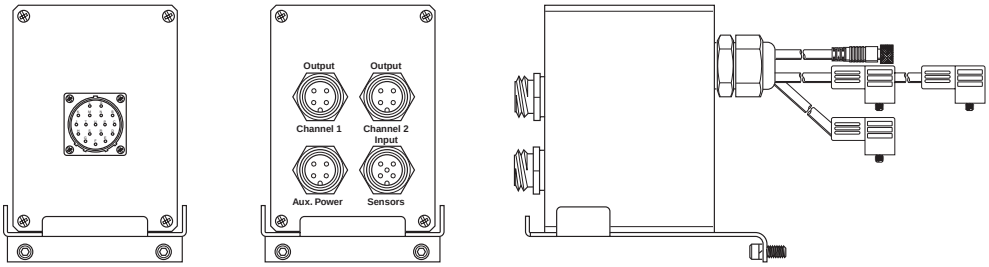

Discrete Units

The Discrete units provide M12 or M18 connectors for ease of installation. The circuit includes the Air Economizing Function and PNP (Sourcing) Outputs. *No external PLC programming is required for Air Economizing Functions because this function is built into the electrical unit.* The following are the Pin Outs for these Discrete units.

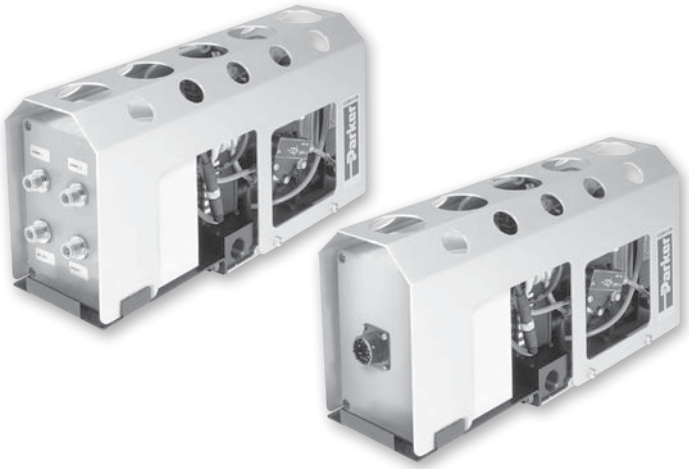

M12, 24VDC

Output - 4-Pin, M12, Keyed Male
Input - 5-Pin, M12, Keyed Male
Aux. Power - 4-Pin, M12, Keyed Male

Output

1 Not Used (Brown)
2 Out CH1 Blow Off (White)
3 Common (Blue)
4 Out CH1 VAC (Black)

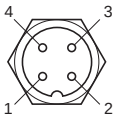

Channel 1

Output

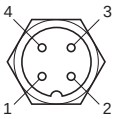

Channel 2

1 Not Used (Brown)
2 Out CH2 Blow Off (White)
3 Common (Blue)
4 Out CH2 VAC (Black)

1 Not Used (Brown)
2 Not Used (White)
3 Auxilary Power Common (Blue)
4 Power (Black)

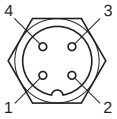

Aux. Power

Input

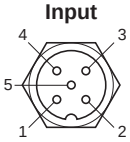

Sensors

1 Power (Brown)
2 CH2 Part Presence (White)
3 Common (Blue)
4 CH1 Part Presence (Black)
5 Not Used (Gray)

M18, 24VDC

18-Pin Connector

24VDC

A CH2 Blow Off
B CH2 Sensor Power
C CH2 Part Presence
D CH2 VAC Control
E CH1 Blow Off
F CH1 Sensor Power
G CH1 Part Presence
H CH1 VAC Control
J DC Voltage Monitor
K Common
L Ground
M Not Used
N Not Used
P Output Power
R Not Used
S Not Used
T Not Used
U Not Used

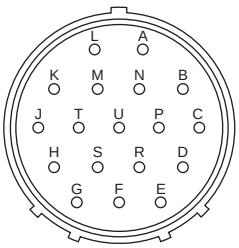

Face View - Male 18-Pin Connector

Notes: Pin B & F are jumpered inside unit.
Either pin can connect power to both sensors.

Pin P & J are jumpered inside unit.
This is for monitoring power only. Pin P is not necessary for operation of the unit.

Programming Features MPS-23 1-Color Generator Mount

Initial setting mode

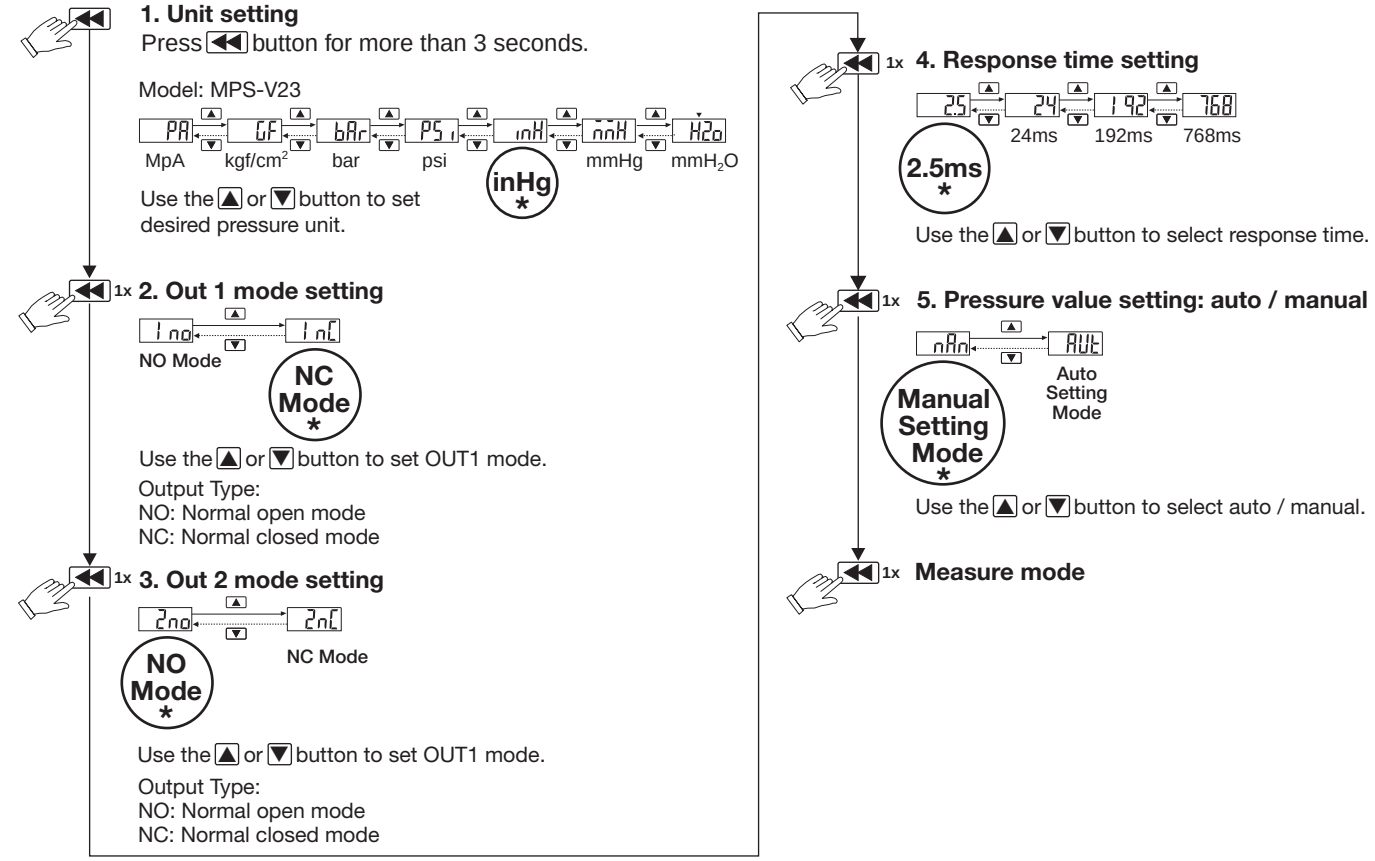

*Factory Setting

Zero point setting / the max. & min. display mode

Zero setting:

press the▼▲ button at the same time until the “00” is shown. Release the button to end zero setting.

The max. value display mode:

Press ▲ button 2 seconds to enter the max. value mode, pressure sensor will detect the max. value and keep max. value displayed.

Press ▲ button 2 seconds to return to measure mode display.

The min. value display mode:

Press ▼ button 2 seconds to enter the min. value mode, pressure sensor will detect the min. value and keep min. value displayed.

Press ▼ button 2 seconds to return to measure mode display.

Key lock / unlock mode

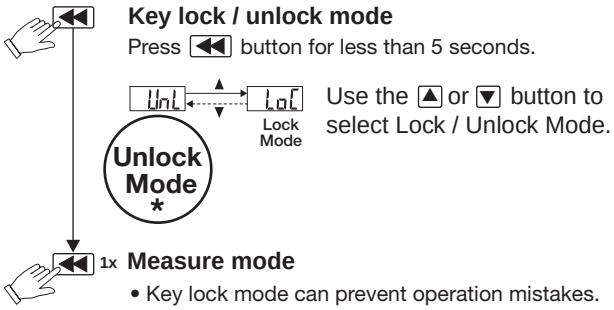

*Factory Setting

Programming Features MPS-23 1-Color Generator Mount

Output type

Hysteresis Mode

P1 (n1) > P2 (n2)
P3 (n3) > P4 (n4)

Output Hysteresis value can be preset.

Normal open mode

Vacuum (MPS-V23)

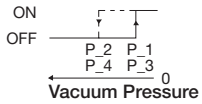

Normal close mode

Vacuum (MPS-V23)

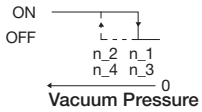

(Note)
When hysteresis mode setting is within 2 digits, if the input and pre-set pressure is quite near, pressure sensor output might cause chattering.

Window comparator Mode

P1 (n1) < P2 (n2)
P3 (n3) < P4 (n4)

Within pressure setting range, pressure sensor output can be ON or OFF.

Normal open mode

Vacuum (MPS-V23)

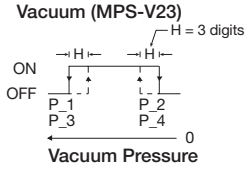

Normal close mode

Vacuum (MPS-V23)

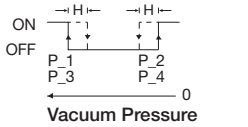

Do not use on CVX Units

Manual setting mode

The LED shows: (P_* at normal open mode and (n_*) at normal close mode. Pressure setting value is shown normally and will not lead to pressure sensor pause or stop working.

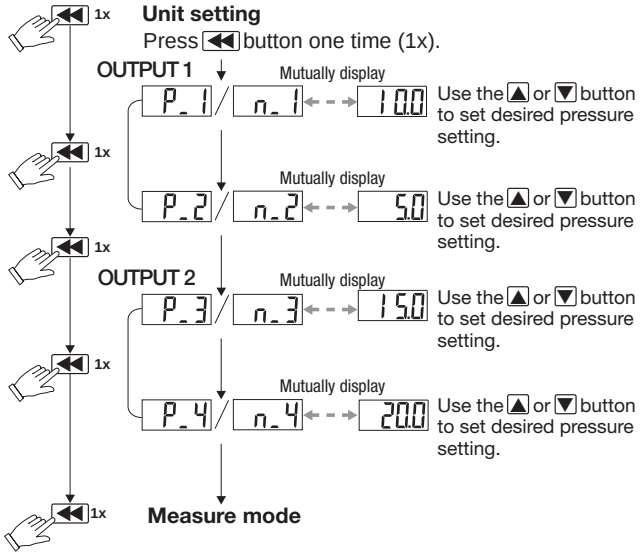

Auto setting mode
(Do not use on CVX Units)

*1. In case of without need of OUT1 pressure value setting, press ▼+▲ at the same time to enter (AP2) / (An2).
*2. In case of without need of OUT2 pressure value setting, press ▼+▲ at the same time to enter measure mode.
3. The LED shows (AP) at normal open mode and (An*) at normal closed mode.

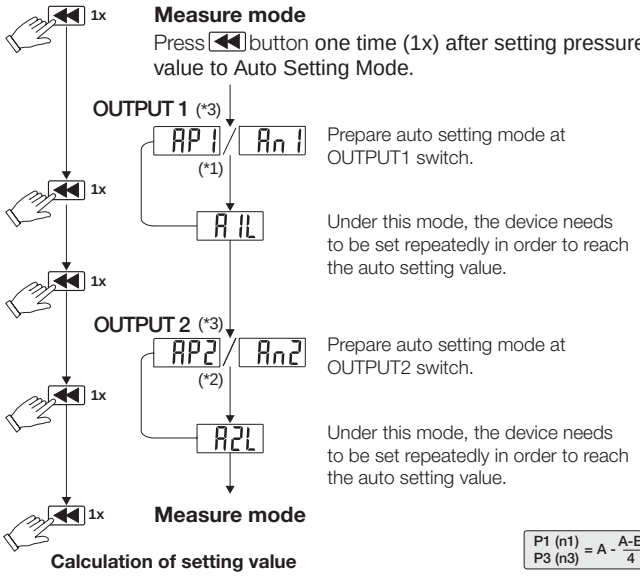

Calculation of setting value
A = The max. pressure value under auto setting mode.
B = The min. pressure value under auto setting mode.

$$\frac{P1\ (n1)}{P3\ (n3)} = A - \frac{A-B}{4}$$

$$\frac{P2\ (n2)}{P4\ (n4)} = B - \frac{A-B}{4}$$

Error messages

Error name		Display	Description	Solutions
Excess load current error	OUT1	*Er1*	Excess load current of 80 mA	Turn off power and check the cause of overload current or lower the current load under 80 mA, then restart
	OUT2	*Er2*		
Residual pressure error		*Er3*	During zero reset, ambient pressure is over ±3% F.S.	Change input pressure to ambient pressure and perform zero reset again
Applied pressure error		– – –	The applied pressure is excess the upper limit of pressure setting	Adjust the pressure within applied pressure range
		– – – –	The applied pressure is excess the lower limit of pressure setting	
System Error		*Er4*	Internal data error	Turn power off and then restart. If error condition remains, please return to factory for inspection
		Er6	Internal system error	
		Er7	Internal data error	

Pneumatic Division
Richland, Michigan 49083

Installation & Service Instructions
CVM217P

CVX0260B Design B Extended Cable

ISSUED: January, 2013
Supersedes: None
Doc.# CVM217P, EN# 130009

⚠ WARNING

To avoid unpredictable system behavior that can cause personal injury and property damage:

- **Disconnect electrical supply (when necessary) before installation, servicing, or conversion.**
- **Disconnect air supply and depressurize all air lines connected to this product before installation, servicing, or conversion.**
- **Operate within the manufacturer's specified pressure, temperature, and other conditions listed in these instructions.**
- **Medium must be moisture-free if ambient temperature is below freezing.**
- **Service according to procedures listed in these instructions.**
- **Installation, service, and conversion of these products must be performed by knowledgeable personnel who understand how pneumatic products are to be applied.**
- **After installation, servicing, or conversion, air and electrical supplies (when necessary) should be connected and the product tested for proper function and leakage. If audible leakage is present, or the product does not operate properly, do not put into use.**
- **Warnings and specifications on the product should not be covered by paint, etc. If masking is not possible, contact your local representative for replacement labels.**

Safety Guide

For omplete information on recommended application guidelines, see the Safety Guide section of Pneumatic Division catalogs or you can download the **Pneumatic Division Safety Guide** at: www.parker.com/safety

Introduction

Follow these instructions when installing, operating, or servicing the product.

⚠ Cautions

- The CVX0260B does not require lubrication to function like other pneumatic components.
- The CVX0260B functions efficiently at 70 PSI while in operation. Regulate the inlet air pressure to 70 PSI during operations.
- Inlet compressed air levels below 70 PSI will yield lower vacuum levels and could effect the overall performance of the system.
- Filtrate the inlet air to protect the CVX0260B against contaminating matter typically found in compressed air systems (i.e. rust, water, compressor oil, or other foreign particles). A standard 40 micron filter is recommended.
- The CVX0260B inlet compressed air must be filtered, regulated, and periodically maintenance to insure maximum operating performance and warranty.
- The air economizing functions and check valves require proper fittings and suction cups to prevent vacuum leakage. The vacuum ports are 3/8" G or 3/8" NPT female threads and require appropriate fittings to properly seal the systems. For NPT fittings, use a dry seal or tape to seal the fittings throughout the system.
- Primary vacuum filtration is always recommended between the cups and the vacuum ports of the generator. Collection of particles and other matter from the work piece will reduce the maximum vacuum level of the unit over a period of use. The frequency of the filter maintenance will vary with each environment and application.
- Each CVX0260B incorporates a small filter housed on the body to protect the internal components of the generator. Additional maintenance of this filter will also vary with each environment and application.

CVX0260B with M12 Connectors

CVX0260B with DeviceNET

⚠ WARNING

FAILURE OR IMPROPER SELECTION OR IMPROPER USE OF THE PRODUCTS AND/OR SYSTEMS DESCRIBED HEREIN OR RELATED ITEMS CAN CAUSE DEATH, PERSONAL INJURY AND PROPERTY DAMAGE.

This document and other information from Parker Hannifin Corporation, its subsidiaries and authorized distributors provide product and/or system options for further investigation by users having technical expertise. It is important that you analyze all aspects of your application, including consequences of any failure and review the information concerning the product or systems in the current product catalog. Due to the variety of operating conditions and applications for these products or systems, the user, through its own analysis and testing, is solely responsible for making the final selection of the products and systems and assuring that all performance, safety and warning requirements of the application are met.

The products described herein, including without limitation, product features, specifications, designs, availability and pricing, are subject to change by Parker Hannifin Corporation and its subsidiaries at any time without notice.

EXTRA COPIES OF THESE INSTRUCTIONS ARE AVAILABLE FOR INCLUSION IN EQUIPMENT / MAINTENANCE MANUALS THAT UTILIZE THESE PRODUCTS. CONTACT YOUR LOCAL REPRESENTATIVE.

Forward

The CVX0260B is a MC72 package with the ultimate air circuit for all of your material handling systems. The CVX0260B is ideal for non-porous applications that require fast response of large vacuum and blow-off release flow rates, Emergency Stop Management System, optional air-economizing features, and device net communication. The Emergency Stop Management System can operate a normally closed system during an emergency event or power failure situation. Typically, with a normally closed air circuit, the user controls the vacuum with a command signal. During an emergency event or power failure event, the vacuum command signal is lost, but, the system can detect the presence of a part and continue to operate in the vacuum mode. If the system detects that a part is not present, each vacuum channel, operating independently, will close to eliminate any unnecessary air consumption. Additional air economizing features are controlled by the sensor outputs to make this unit the ultimate weapon against air consumption.

There are 4 separate states of air logic: vacuum, blow-off, idle, and EOS. The air circuit in Figure 1 illustrates a basic normally closed unit with the Emergency Stop operating system. Vacuum is created when a high signal is sent to Vacuum Pilot Valve **(1)**. The output of the Vacuum Sensor **(2)**, controls the vacuum level and air economizing function by feedback to the Vacuum Solenoid Valve **(1)**. The Check Valve **(3)** maintains the vacuum level until the Blow-off Pilot Valve **(4)** is activated to release or the hysteresis value of Sensor **(2)** is reached to restore the original vacuum level. The Emergency Stop operating system **(5)** is activated by an emergency event or power failure.

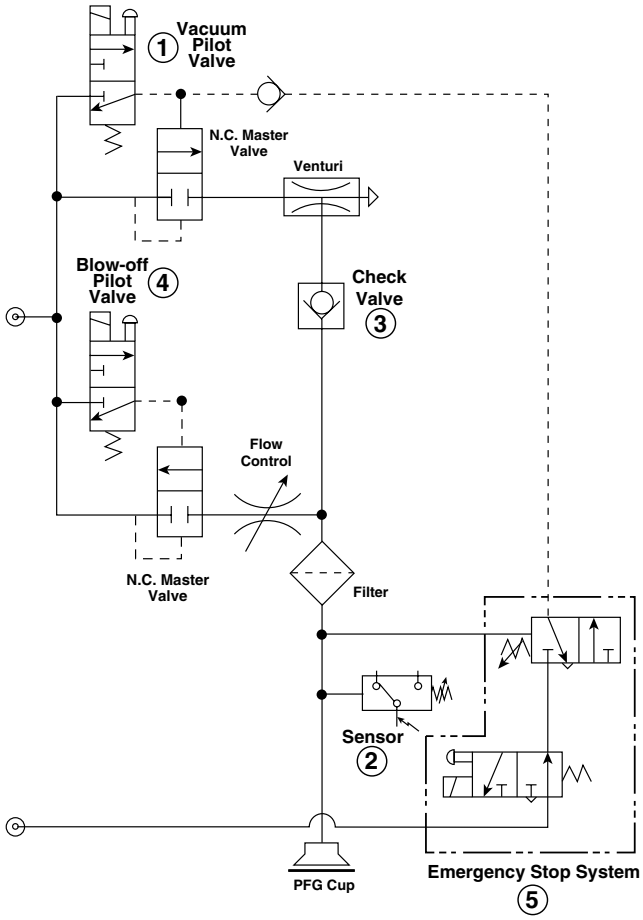

Figure 1

Specifications

CVX0260B Specifications

Media	Non-lubricated Dry Air
Pressure Port	3/8" G, 3/8" NPT Through Port
Vacuum Ports	2 Individual Vacuum Channels 3/8" G Ports or 3/8" NPT
Operating Temperature	32° to 122°F (0° to 50°C)
Operating Pressure	70 PSI
Vacuum Filtration	130 µm
Noise Level	72dB
Air Consumption	10.41 SCFM
Maximum Vacuum Level	-26.2 inHg

Control Valve Specifications

3-Way	Pilot Valves
Manual Operation	Manual Overrides Available
Electrical Connector	DIN type w/LED and Diode Protection, IP65 Rating
Power Supply	24VDC ± 10%
Power Consumption	1.2W
Pressure	70 PSI

Sensor Specifications

Media	Non-lubricated Dry Air
Operating Temperature	32° to 122°F (0° to 50°C)
Humidity	40 to 85% R.H.
Electrical Connection	4-Pin, M8 Connector
Power Supply	10.8 to 30 VDC, Ripple Vp-p 10% Max. Diode Protection
Display	3-Digit, 7-Segment LED
Units of Measure	inHg, mmHg, bar, kPa, Selectable
Display Resolution	0.1 kPa, 0.001 bar, 1 mmHg, 0.1 inHg Selectable
2-Switch Outputs	Individually Selectable N.O or N.C., 80mA, 30V with Overcurrent Protection, LED Status
Operating Mode	Hysteresis Adjustable
Response Time	2ms
Repeatability	± 0.2% F.S.
General Protection	CE Rated
Current Consumption	<55mA

Emergency Stop Operating System Specifications

Two-Way Valve	Diaphragm Actuated, Pneumatic Output
Media	Non-lubricated Air, Dry Air
Operating Range	-4.5 to -25 inHg Vacuum
Pressure Operating Range	70 PSI
Accuracy	± 1.5 inHg
Port Connection	M5 Female
Air Supply	Normally Closed

Emergency Stop Electrical Valve Specifications

3-Way Valve	Direct Acting
Media	Air
Operating Range	70 PSI
Electrical Connection	DIN Connector w/LED and Diode Protection, IP65
Operating Voltage	24VDC ± 10%
Power Consumption	1.8W
Current	0.075A

CVX Vacuum Generators, with electrical enclosure “VD" or “V3”, are intended to be used in a kit for applications that require exceptional blow-off pressure when used with external Vacuum Check - Blow-off Check Valve Systems which are installed between the vacuum port of the vacuum generator and the vacuum cup. Do not install standard CVX units with Vacuum Check - Blow-off Check Valve Systems that require > 5 PSIG positive pressure to uncheck for blow-off function without the addition of extended blow-off cables, CVX unit and external valve as shown. The external valve connected to the extended blow-off cables will provide full inlet pressure during blow-off condition. Consult with the manufacture of the Vacuum Check - Blow-Off Check Valve System for requirements of positive pressure to unseat blow-off check valves.

For new installations or replacement CVX Systems: The Standard CVX unit has an internal check valve to hold degree of vacuum during Air-Economizing Cycles and E-stop conditions. If the system is designed with an external Vacuum Check - Blow-off Check Valve Systems, then order the CVX unit with Kit: B5 Kit. Install or replace CVX Generator. Each CVX unit has 2 channels. For each channel in use, connect the vacuum outlet port to the #1 port of the inline valve. Connect > 30 PSIG positive pressure to the #3 port of the inline valve. Install mufflers in port #4 and #5. Connect port #2 to the vacuum cup that requires higher positive pressure to uncheck vacuum and blow-off check valves installed in the vacuum cup line. Connect the extended blow-off cables marked “B” to the solenoid on each valve. Set-up and operate CVX unit per design requirements.

For replacement of existing CXV Vacuum Generators with Extended Blow-Off Cables: Order CVX unit without Kit: B5 Kit. Replace CVX Unit only by removing existing Extended Blow-off Cables and replace CVX Unit.

Note: CVX Vacuum Generators with extended blow-off cables can be used in standard applications without B5 inline valve. To use in standard application, remove metal cover and connect the extended blow-off cable to the blow-off solenoids that are on the main CVX unit. Replace metal cover.

Model Number Index

(Bold Items are Stocked)

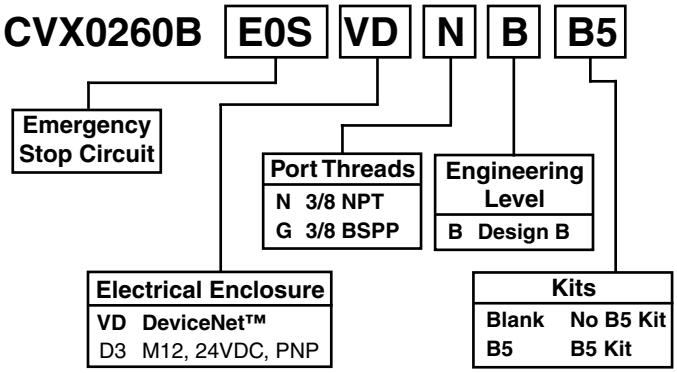

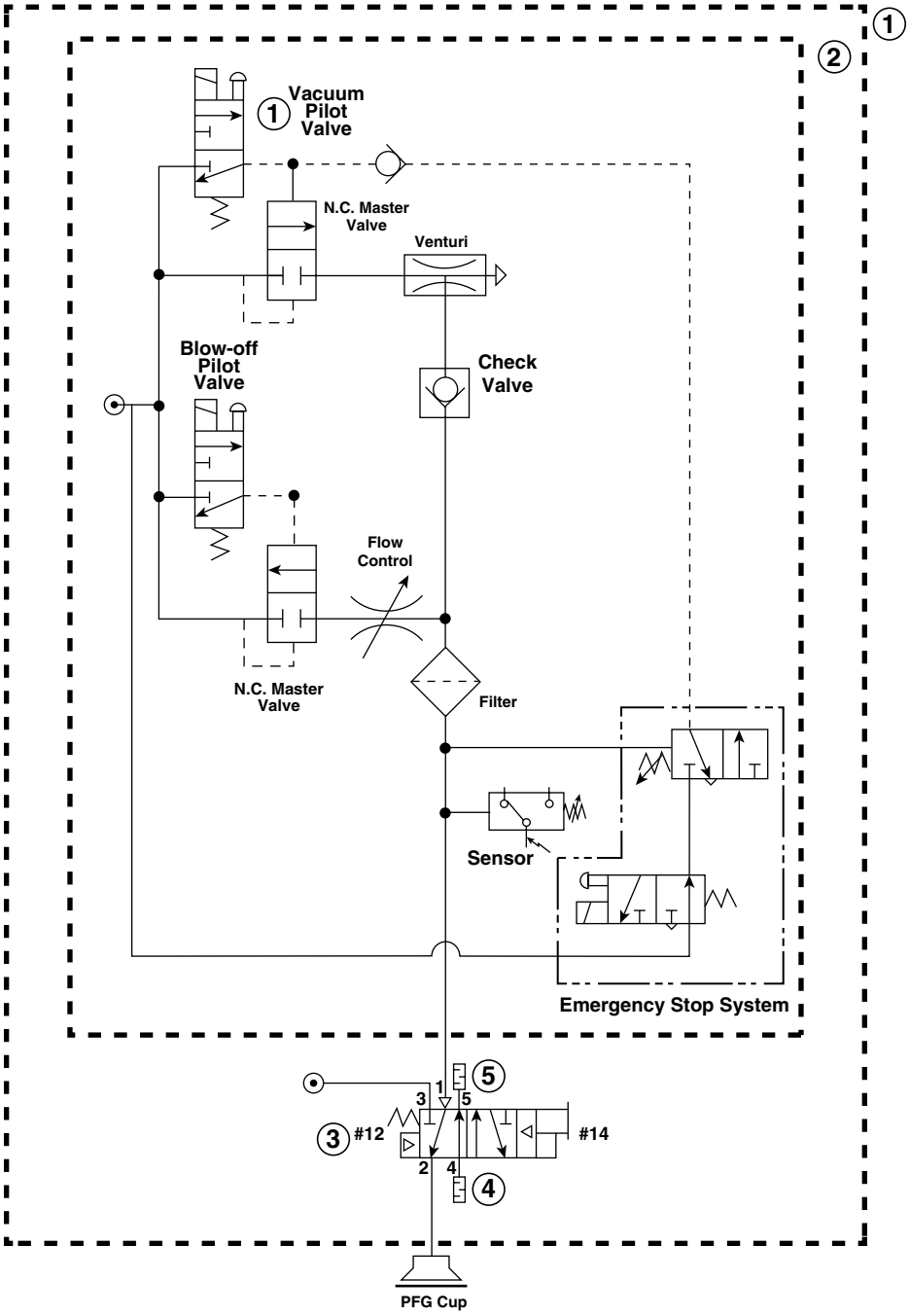

Item	Qty.	Part Number NPT	Part Number BSPP	Description
1	1	CVX0260BE0SVDNBB5	CVX0260BE0SVDGBB5	CVX NPT E-stop / B5 kit
Above Kit Includes the following components:				
2	1	CVX0260BE0SVDNB	CVX0260BE0SVDGNB	CVX NPT E-stop ext cables
3	2	B512DB549C	B517DB549C	B5 Valve, 4-way, 24VDC, 15mm solenoid
4	2	EM25	P6M-PAB2	1/4" Muffler
5	2	EM37	P6M-PAB3	3/8" Muffler

Sensors

The Convum MPS-23 sensor with display has two (2) individual switch outputs with hysteresis setting for feedback and controls.

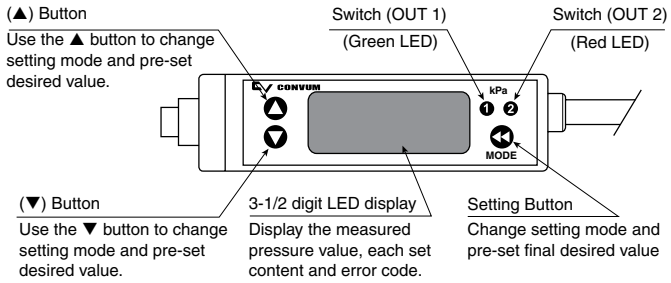

Factory Settings

OUT 1 AIR ECONOMIZING	OUT 2 PART PRESENCE
N.C. Below n_1, N.O. Above n_1	N.O. Below P_3, N.C. Above P_3
n_1, Switch Point 18 inHg	P_3, Switch Point 10 inHg
n_2, Hysteresis 15.5 inHg Hysteresis Mode	P_4, Hysteresis 9.5 inHg Hysteresis Mode
Units of Measure; inHg	

Sensor settings must be set so that n_1 > n_2 and P_3 > P_4.

AIR ECONOMIZING SWITCH POINT IS FACTORY SET AT 18 inHg. ALL SYSTEM DESIGN PARAMETERS MUST BE ANALYZED BEFORE CHANGING "n_1". Air Economizing function will be turned off by setting "n_1" above the maximum vacuum pressure that the system can create.

It may be necessary to adjust the part presence Output 2 to avoid false signals when vacuum is falsely created by tubing or fitting flow restrictions in an open system.

Emergency or Power Failure Operating System (EOS)

(Patent Pending)

The Emergency Operating System is designed to maintain and continue the current operation mode of the vacuum generator when an emergency or power failure occurs by an adjustable or fixed vacuum level on the mechanical pressure sensor.

Blow-off Adjustment

The volume of air during the blow-off function to release the workpiece can be set by turning the needle adjustment up or down. Access the needle adjustment through opening of protective cover (topside).

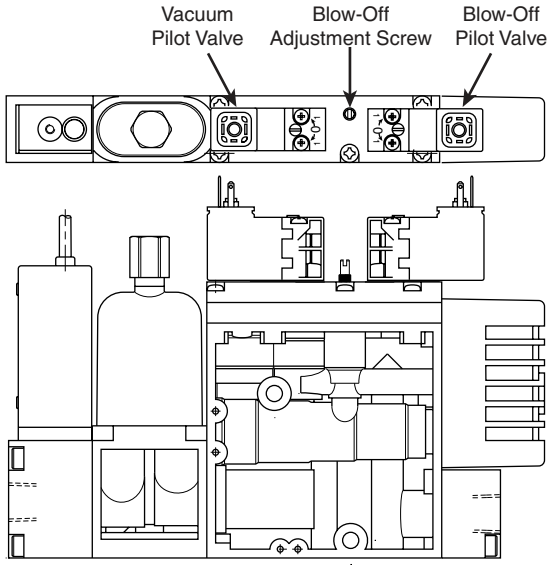

Air Economizing and Vacuum Level Control

The vacuum sensor Output 1 is configured normally closed and turns off the vacuum pilot valve. This controlled vacuum level is programmed on the sensor by adjusting "n_1" or Output 1. When the desired vacuum level is reached, the system begins the air-economizing function by closing the vacuum valve air supply and allowing the internal check valve to maintain the vacuum level until the blow-off solenoid valve is activated to release the part or the hysteresis value (programmed "n_2") of Output 1 is reached to restore the vacuum to the original desired level.

Operation Mode

MODES	VACUUM ON	VACUUM OFF	BLOW-OFF	EOS
Normal Conditions	Air Economizing between 18-15.5 inHg	Idle	Blow-off On Blow-off Idle	EOS Off
Emergency or Power Failure	Vacuum On ↓ ↓ Vacuum On	Idle	Blow-off On Idle ↓ ↓ Idle Idle	EOS On
Restore Power	Vacuum On Air Economizing Function Resumes	Idle	Idle	EOS Off

Replacement Components

Item	Part Number	Description
1	CVK-S	Silencer
2 thru 7	CVK-F	Filter Kit
5	CVK-E	Filter Element
8, 9, 10	MC72-4PD	Pilot Valve Kit
11	3PB119-00-L-3	CVX E-Stop Valve
12	CVM99821	Diaphragm Valve
13	ENC244	Cover (Not Shown)
14	PSCVXDNB PSCVXD3B	DeviceNet M12 Discrete
15	MPS-V23C-NC	NPN Sensor

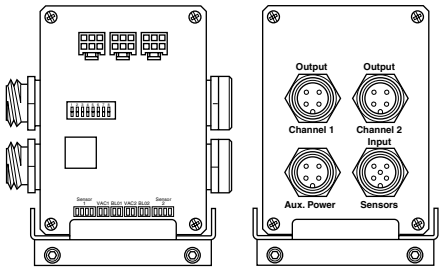

PSCVXVDB PSCVXV3B

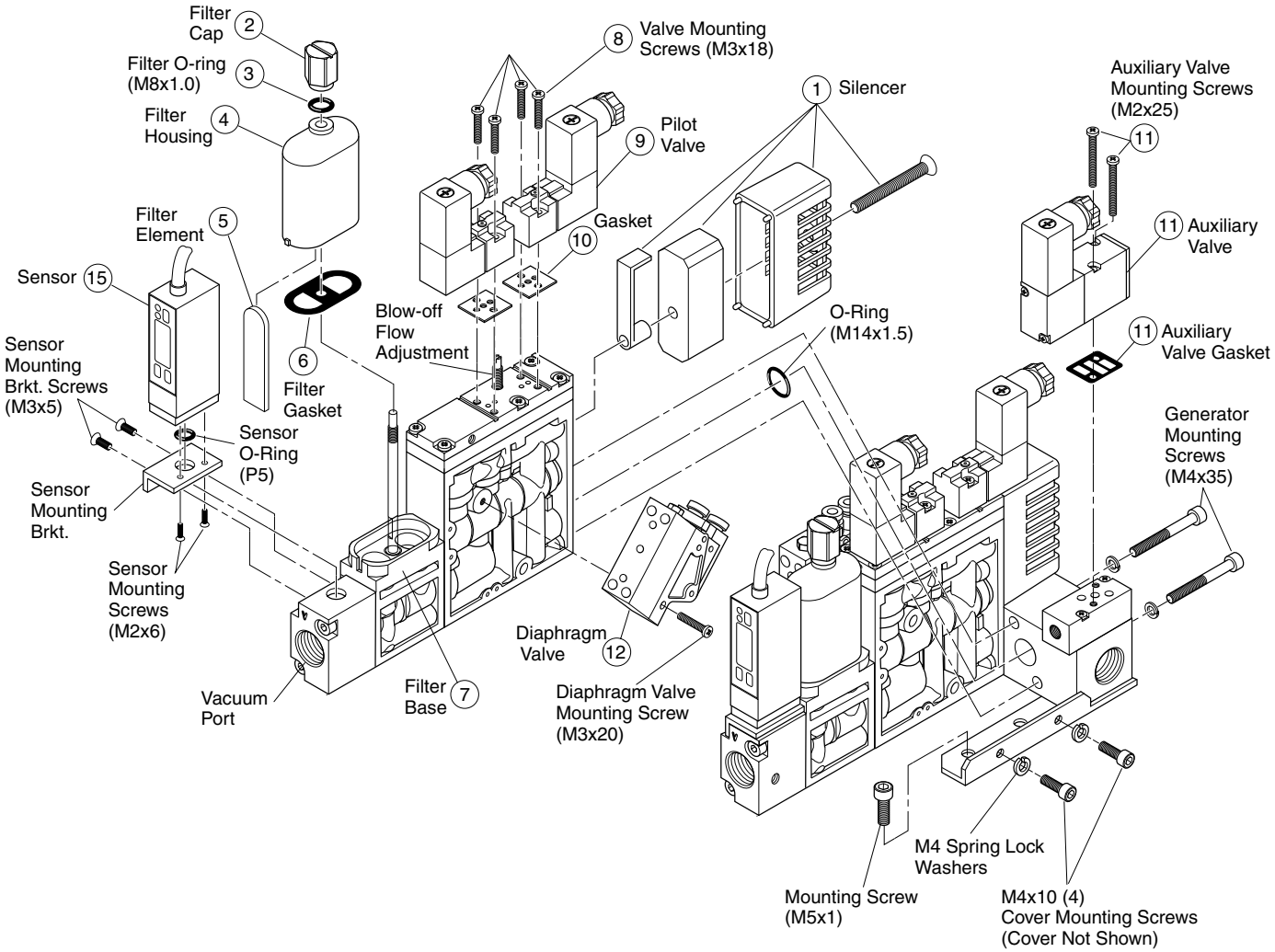

Scheduled Maintenance

Filters – Periodic maintenance of the secondary vacuum filter is necessary. The frequency of maintenance depends on the environment and application. As the filter collects product from the environment the maximum vacuum level potential and response time may vary.

Silencer – Periodic maintenance of the silencer may be required. The frequency of maintenance depends on the environment and condition of the air supply.

Contents

The CVX0260B is supplied with four (4) M5 x 1 Socket Head Cap Screws to secure the unit to the optional mounting plate.

CVX0260BE0SVD**

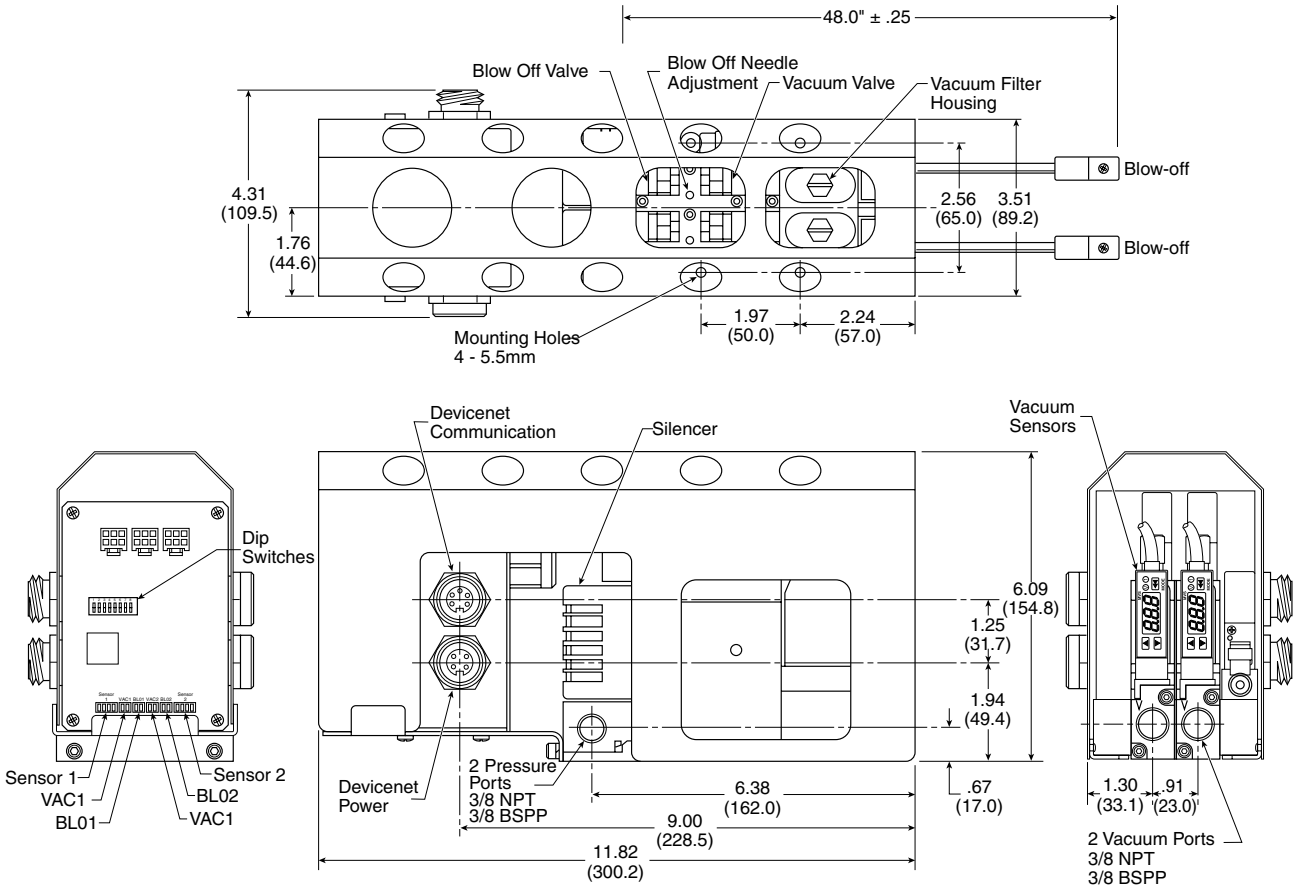

DeviceNet Kit PSCVXVDB

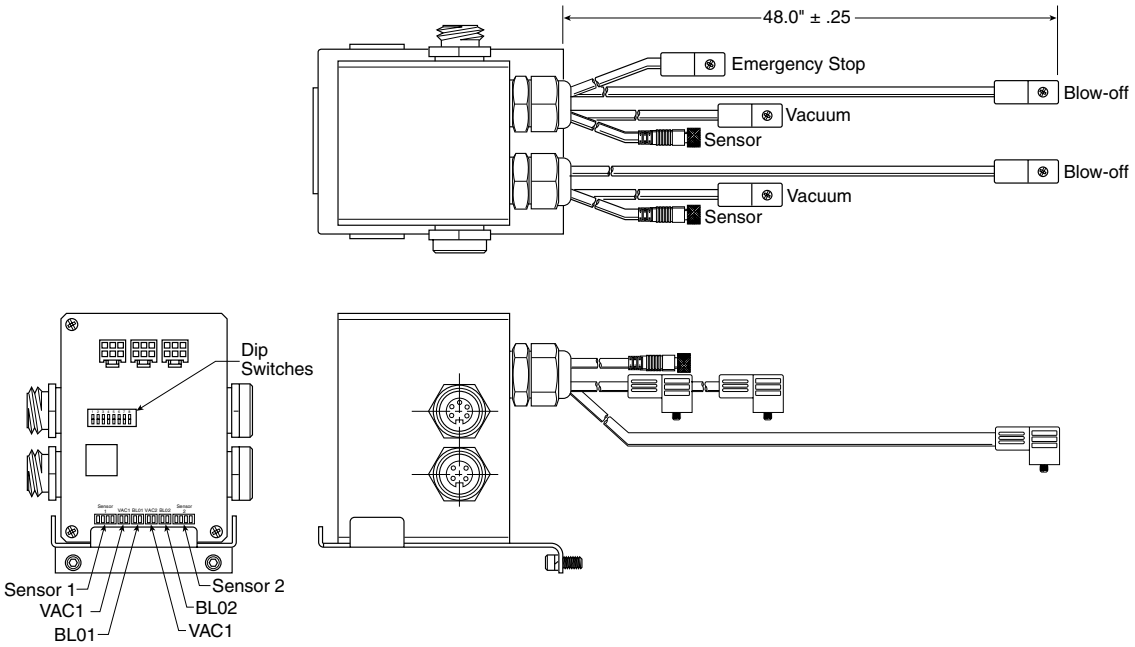

DeviceNet™

The DeviceNet™ power bus supplies power for the DeviceNet circuitry and the two sensors. The auxiliary power bus provides power for the vacuum solenoids and blow-off solenoids. *No external PLC programming is required for Air Economizing Functions because this function is built into the electrical unit.* The following are power requirements for the DeviceNet circuitry. Voltage Range: 12.5 to 24VDC; Current 150 mA.

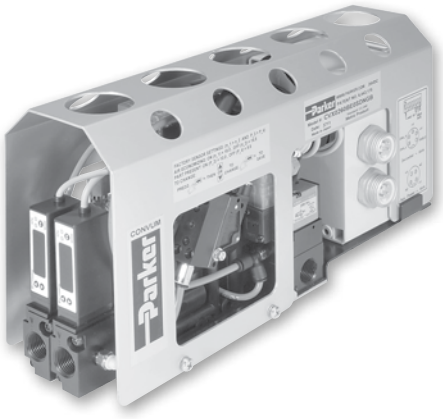

DeviceNet™ Bus Connectors
5-Pin Mini-Style

DeviceNet Connections

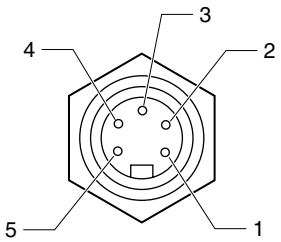

Male (Pins)

1.) Drain
2.) V+
3.) V-
4.) CAN-H
5.) CAN-L

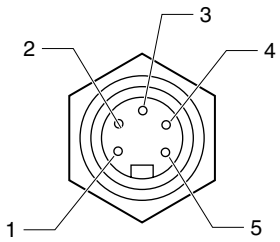

Female (Sockets)

24VDC Power Connections

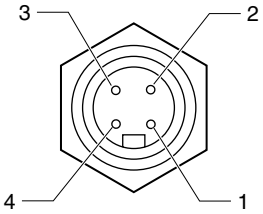

Male (Pins)

1.) 24VDC
2.) Not Used
3.) Not Used
4.) Common

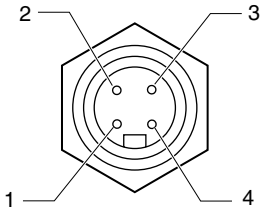

Female (Sockets)

I/O Data Table

Input Data Table

	Bit							
	0	1	2	3	4	5	6	7
Input Byte 1	CH1 Part Presence	CH2 Part Presence	Not Used	Not Used	Not Used	Not Used	Not Used	Not Used

Output Data Table

	Bit							
	0	1	2	3	4	5	6	7
Input Byte 1	CH1 Vacuum	CH1 Blow-Off	CH2 Vacuum	CH2 Blow-Off	Not Used	Not Used	Not Used	Not Used

DeviceNet™ Information

General Description

The Convum Vacuum Generator operates as a Group II Only slave on the DeviceNet™ network. The unit supports the following types of messaging: Explicit, Polled, Cyclic, Change of State, and Bit Strode. It does not support the Explicit Unconnected Message Manager (UCMM).

The Cyclic, Change of State, and Bit Strobe types of messaging were incorporated into the product beginning with Firmware Revision No 4.23 or later. This can be verified by the label on the microcontroller on the p.c. board.

The unit has four (4) digital outputs and two (2) digital inputs. The digital outputs control two (2) vacuum states and two (2) blow-off states. The two (2) digital inputs are two-part present indications (one for each channel) and an auxiliary power voltage indicator.

The DeviceNet™ power bus supplies power for the DeviceNet™ circuitry and the two (2) Convum sensors. The auxiliary power bus provides power for the vacuum solenoids, the blow-off solenoids, and the solenoid for the Emergency Stop circuit. The following are the power requirements for the DeviceNet™ circuitry.

Voltage Range . 12.5 to 24VDC

Current.....150Ma

The following is the product information for the DeviceNet™ interface:

Vendor ID (VendCode) 510

Device Type (ProdType).....7

Product Code (ProdCode).....1

Bytes Produced (polled).....1

Bytes Consumed (polled).....1

The following are the power requirements for the circuitry on the auxiliary power bus:

Voltage Range..... 24VDC

Current..... 400Ma max.

MAC ID Settings

The MAC ID is set with the lowest six (6) positions on the 8-Pin DIP switch located on the p.c. board. The least significant digit of the setting is on position 1 and the most significant digit is on position 6. To have a switch be read as a “1”, set it to the “ON” position. To have the switch be read as a “0”, set it to the “OFF” position.

Baud Rate Settings

The baud rate is set with the two highest positions on the 8-Pin DIP switch. The lower digit is position 7 and the higher digit is position 8. To have a switch be read as a “1”, set it to the “ON” position. To have the switch be read as a “0”, set it to the “OFF” position. The following are the DIP switch settings for the baud rate:

Switch Settings (7 and 8)	Baud Rate
00	125k
01	250k*
10	500k
11	Invalid

* Factory Preset 250k

Poll Command and Digital Outputs

The unit has four (4) outputs. The outputs are bitmapped to the lower nibble of the byte. The outputs are turned ON by sending a “1” to their respective bits, and they are turned OFF by sending a “0” to their respective bits. The following are the polled data bytes to actuate the four outputs:

Polled Command Date	Action
0x01	Turns ON Channel 1 Vacuum
0x02	Turns ON Channel 1 Blow-off
0x04	Turns ON Channel 2 Vacuum
0x08	Turns ON Channel 2 Blow-off

Poll Response and Digital Inputs

Inputs indicate that a part is present on either of the two (2) channels. The inputs are bit mapped to the lower nibble of the byte in the polled response. The following are the feedback signal meanings for the two (2) inputs:

Polled Response Date	Interpretation
0x01	Channel 1, Part Present
0x02	Channel 2, Part Present

Explicit Messaging and Digital Outputs

The outputs are accessed through the Discrete Output Point Object, Class Code 0x09.

Output	Instance No.	Attribute
Vacuum 1	1	3
Blow-off 1	2	3
Vacuum 2	3	3
Blow-off 2	4	3

Explicit Messaging and Digital Inputs

The inputs are also accessed through the Discrete Input Object, Class Code 0x08, with Explicit messaging.

Input	Instance No.	Attribute	Explicit Response
Channel 1, Part Present	1	3	0x01
Channel 2, Part Present	2	3	0x01

Change of State Messaging

In this mode of messaging, date is sent to the Master when the Slave device inputs change. These device inputs are the two-part present indications. Change of State messaging can send acknowledged or unacknowledged date.

For acknowledged date, the Acknowledge Timer in the Acknowledge Handler Object (Class Code 0x2B, Attribute 1) sets the time to wait before resending the data. The range of values for this attribute is 1 to 65,635ms. Zero is invalid. The default value is 16ms.

A Slave can be allocated for Cyclic or Change of State but not both. Change of State can function with Bit-Strobed and Polled messaging.

Cyclic Messaging

In this mode of messaging, the data from the Slave device inputs is sent back to the master at a pre-configured periodic time interval. These Slave device inputs are the two-part present indications and the auxiliary power indication. The Cyclic messaging also can be acknowledged or unacknowledged.

The period of the messaging interval is controlled by the expected packet rate (EPR) which can be adjusted in millisecond increments.

Bit-Strobe Messaging

A master sends a Bit-Strobe command to each Slave whose MAC ID is on the Master's Scan List In the command there is one bit of output data for each Slave; therefore, the command is 64 bits or 8 bytes long.

To the master, each Slave returns a Bit-Strobe response which can contain up to 8 bytes of input data and / or status information. The format of the Bit-Strobe response for the Convum / Parker DeviceNet™ is the same as the Poll response.

Factory DIP Switch Settings

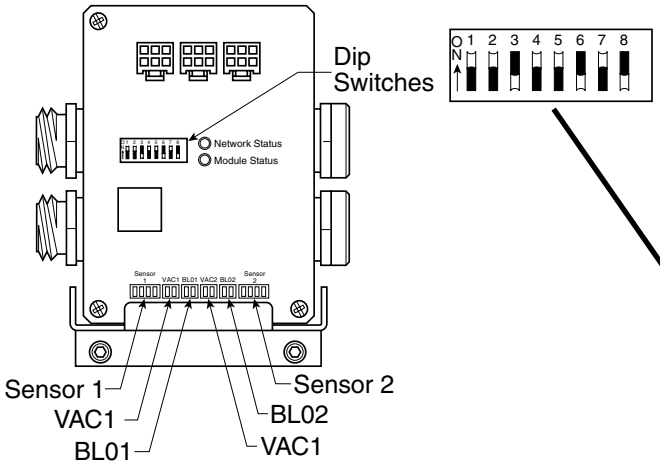

Module Status Lights (LEDs)

Indicator	Function	
Network Status	Off	No power applied to module or module not on-line
	Steady Green	Normal Operation: on-line and established connection(s)
	Flashing Green	Device on-line, waiting for scanner to establish connection
	Steady Red	Failed communication: duplicate address or bus-off
	Flashing Red	One or more I/O connections are in the Timed-out state or output fault
Module Status	Off	No power applied to module at bus or power connector
	Steady Green	Normal Operation
	Flashing Red	Low or No Bus Power (VDC+)

*Device**Net**™* MAC ID	# 1	# 2	# 3	# 4	# 5	# 6
0	OFF	OFF	OFF	OFF	OFF	OFF
1	ON	OFF	OFF	OFF	OFF	OFF
2	OFF	ON	OFF	OFF	OFF	OFF
3	ON	ON	OFF	OFF	OFF	OFF
4	OFF	OFF	ON	OFF	OFF	OFF
5	ON	OFF	ON	OFF	OFF	OFF
6	OFF	ON	ON	OFF	OFF	OFF
7	ON	ON	ON	OFF	OFF	OFF
8	OFF	OFF	OFF	ON	OFF	OFF
9	ON	OFF	OFF	ON	OFF	OFF
10	OFF	ON	OFF	ON	OFF	OFF
11	ON	ON	OFF	ON	OFF	OFF
12	OFF	OFF	ON	ON	OFF	OFF
13	ON	OFF	ON	ON	OFF	OFF
14	OFF	ON	ON	ON	OFF	OFF
15	ON	ON	ON	ON	OFF	OFF
16	OFF	OFF	OFF	OFF	ON	OFF
17	ON	OFF	OFF	OFF	ON	OFF
18	OFF	ON	OFF	OFF	ON	OFF
19	ON	ON	OFF	OFF	ON	OFF
20	OFF	OFF	ON	OFF	ON	OFF
21	ON	OFF	ON	OFF	ON	OFF
22	OFF	ON	ON	OFF	ON	OFF
23	ON	ON	ON	OFF	ON	OFF
24	OFF	OFF	OFF	ON	ON	OFF
25	ON	OFF	OFF	ON	ON	OFF
26	OFF	ON	OFF	ON	ON	OFF
27	ON	ON	OFF	ON	ON	OFF
28	OFF	OFF	ON	ON	ON	OFF
29	ON	OFF	ON	ON	ON	OFF
30	OFF	ON	ON	ON	ON	OFF
31	ON	ON	ON	ON	ON	OFF
32	OFF	OFF	OFF	OFF	OFF	ON
33	ON	OFF	OFF	OFF	OFF	ON
34	OFF	ON	OFF	OFF	OFF	ON
35	ON	ON	OFF	OFF	OFF	ON
36*	**OFF**	**OFF**	**ON**	**OFF**	**OFF**	**ON**
37	ON	OFF	ON	OFF	OFF	ON
38	OFF	ON	ON	OFF	OFF	ON
39	ON	ON	ON	OFF	OFF	ON
40	OFF	OFF	OFF	ON	OFF	ON
41	ON	OFF	OFF	ON	OFF	ON
42	OFF	ON	OFF	ON	OFF	ON
43	ON	ON	OFF	ON	OFF	ON
44	OFF	OFF	ON	ON	OFF	ON
45	ON	OFF	ON	ON	OFF	ON
46	OFF	ON	ON	ON	OFF	ON
47	ON	ON	ON	ON	OFF	ON
48	OFF	OFF	OFF	OFF	ON	ON
49	ON	OFF	OFF	OFF	ON	ON
50	OFF	ON	OFF	OFF	ON	ON
51	ON	ON	OFF	OFF	ON	ON
52	OFF	OFF	ON	OFF	ON	ON
53	ON	OFF	ON	OFF	ON	ON
54	OFF	ON	ON	OFF	ON	ON
55	ON	ON	ON	OFF	ON	ON
56	OFF	OFF	OFF	ON	ON	ON
57	ON	OFF	OFF	ON	ON	ON
58	OFF	ON	OFF	ON	ON	ON
59	ON	ON	OFF	ON	ON	ON
60	OFF	OFF	ON	ON	ON	ON
61	ON	OFF	ON	ON	ON	ON
62	OFF	ON	ON	ON	ON	ON
63	ON	ON	ON	ON	ON	ON

* Factory Preset

CVX0260BE0SV3B*B

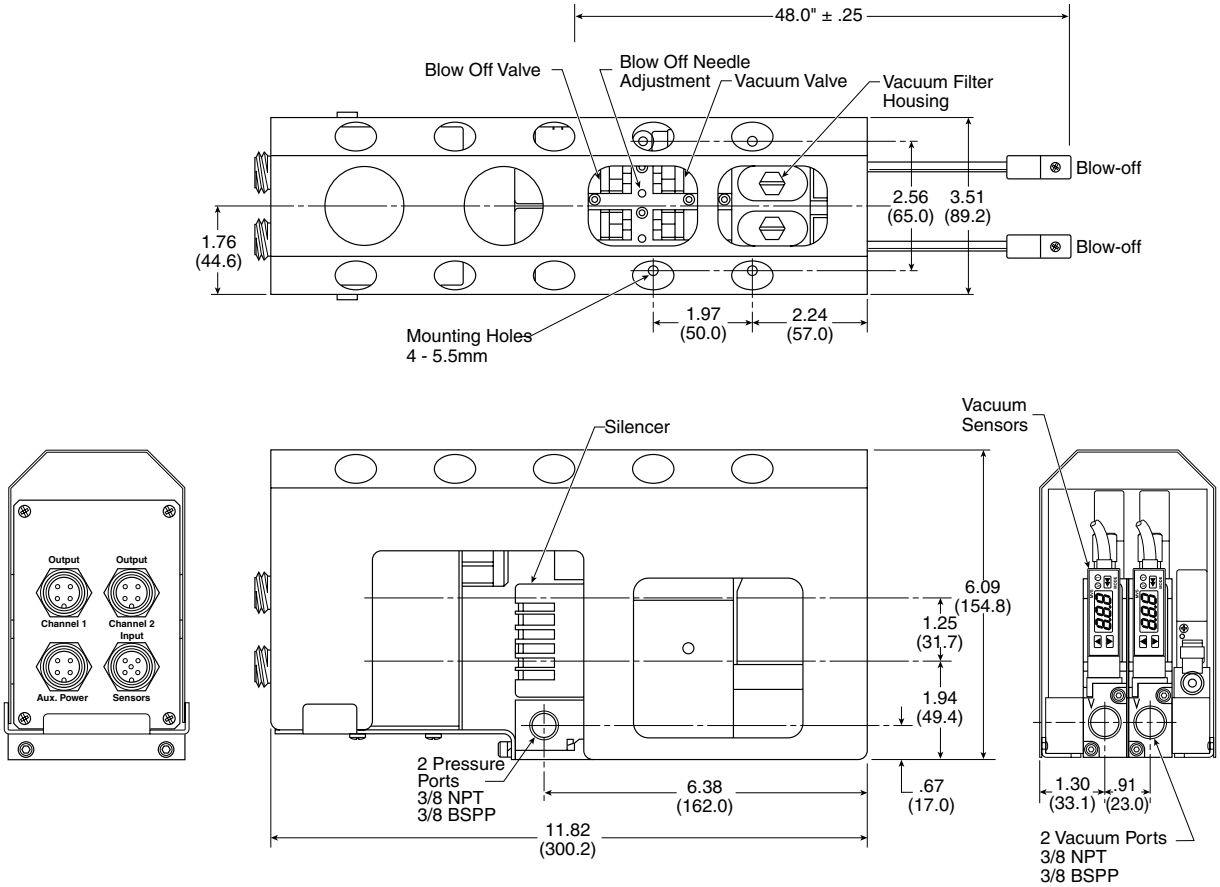

Discrete Kits
PSCVXV3B - M12, 24VDC

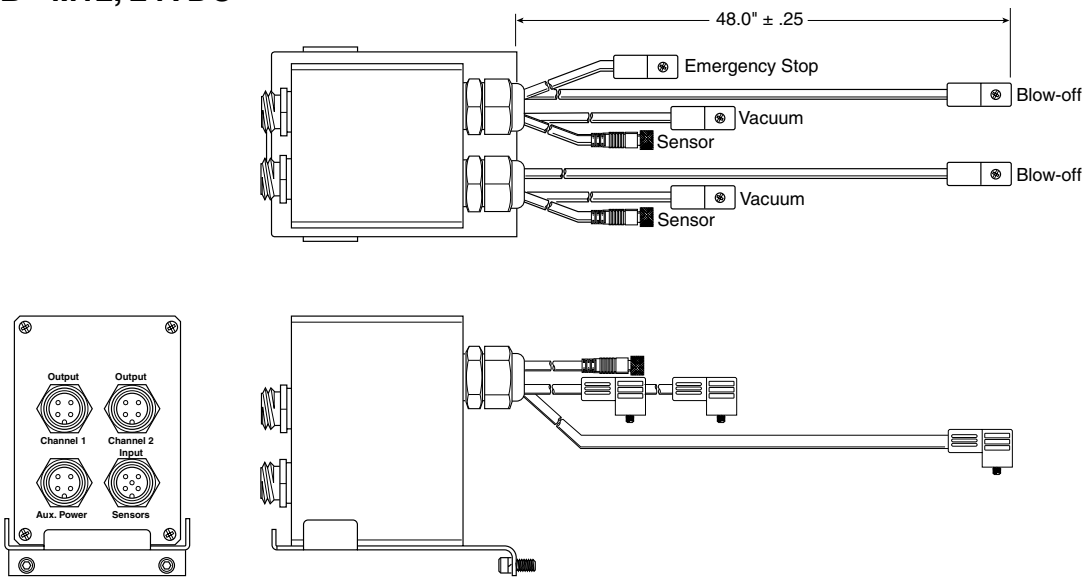

Discrete Units

The Discrete units provide M12 or M18 connectors for ease of installation. The circuit includes the Air Economizing Function and PNP (Sourcing) Outputs. *No external PLC programming is required for Air Economizing Functions because this function is built into the electrical unit.* The following are the Pin Outs for these Discrete units.

M12, 24VDC

Output - 4-Pin, M12, Keyed Male
Input - 5-Pin, M12, Keyed Male
Aux. Power - 4-Pin, M12, Keyed Male

Output

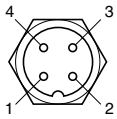

Channel 1

1 Not Used (Brown)
2 Out CH1 Blow Off (White)
3 Common (Blue)
4 Out CH1 VAC (Black)

Output

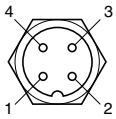

Channel 2

1 Not Used (Brown)
2 Out CH2 Blow Off (White)
3 Common (Blue)
4 Out CH2 VAC (Black)

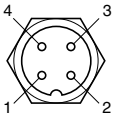

Aux. Power

1 Not Used (Brown)
2 Not Used (White)
3 Auxilary Power Common (Blue)
4 Power (Black)

Input

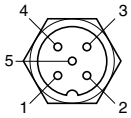

Sensors

1 Power (Brown)
2 CH2 Part Presence (White)
3 Common (Blue)
4 CH1 Part Presence (Black)
5 Not Used (Gray)

Programming Features MPS-23 1-Color Generator Mount

Initial setting mode

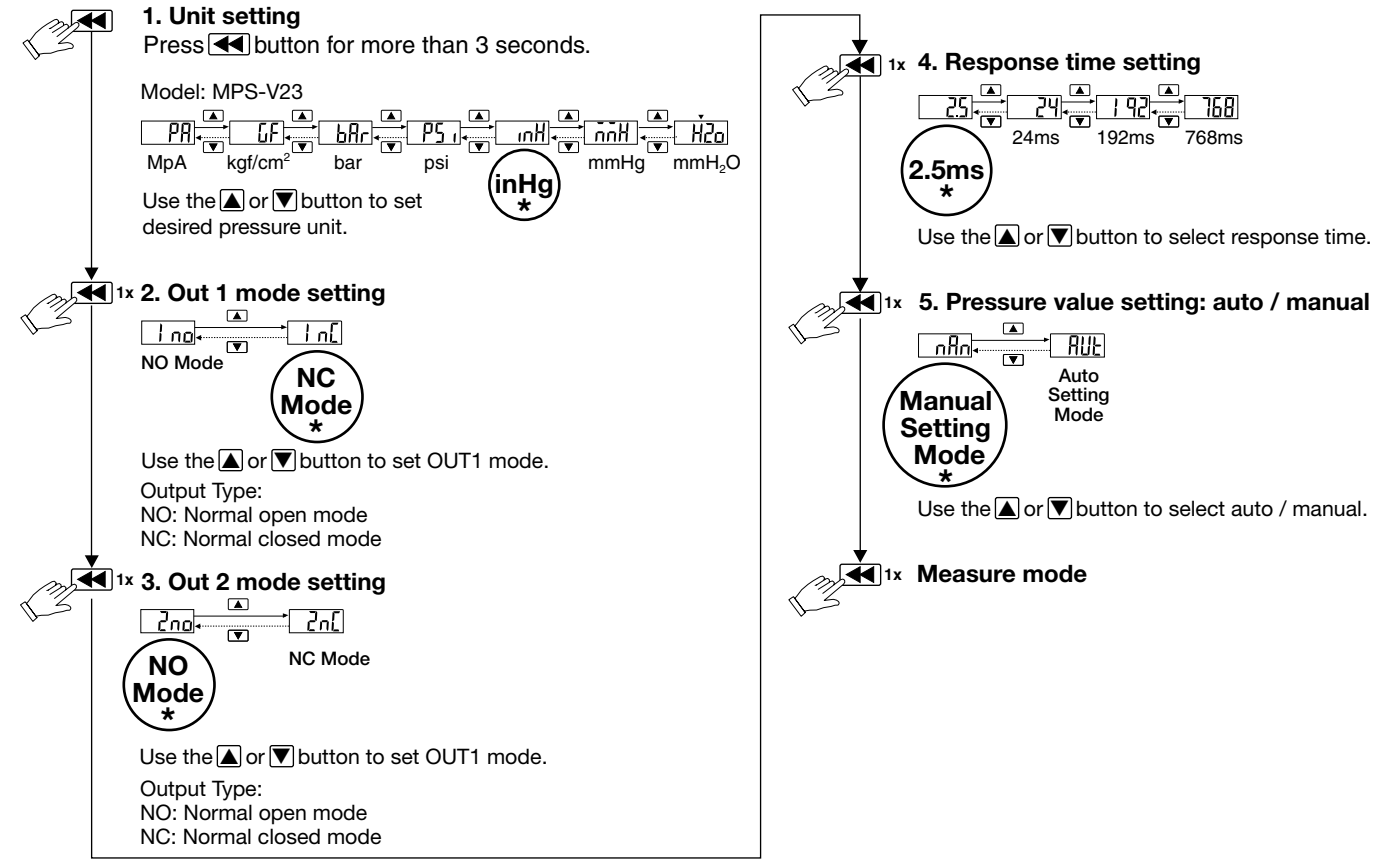

*Factory Setting

Zero point setting / the max. & min. display mode

Zero setting:

press the▼▲ button at the same time until the “00” is shown. Release the button to end zero setting.

The max. value display mode:

Press ▲ button 2 seconds to enter the max. value mode, pressure sensor will detect the max. value and keep max. value displayed.

Press ▲ button 2 seconds to return to measure mode display.

The min. value display mode:

Press ▼ button 2 seconds to enter the min. value mode, pressure sensor will detect the min. value and keep min. value displayed.

Press ▼ button 2 seconds to return to measure mode display.

Key lock / unlock mode

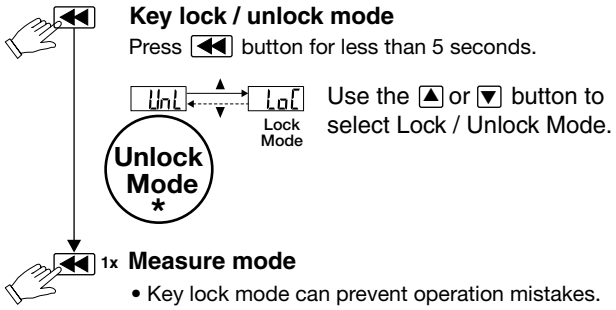

*Factory Setting

Programming Features MPS-23 1-Color Generator Mount

Output type

Hysteresis Mode

P1 (n1) > P2 (n2)
P3 (n3) > P4 (n4)

Output Hysteresis value can be preset.

Normal open mode

Vacuum (MPS-V23)

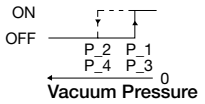

Normal close mode

Vacuum (MPS-V23)

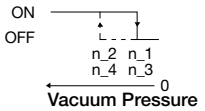

(Note)
When hysteresis mode setting is within 2 digits, if the input and pre-set pressure is quite near, pressure sensor output might cause chattering.

Window comparator Mode

P1 (n1) < P2 (n2)
P3 (n3) < P4 (n4)

Within pressure setting range, pressure sensor output can be ON or OFF.

Normal open mode

Vacuum (MPS-V23)

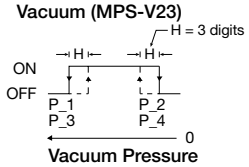

Normal close mode

Vacuum (MPS-V23)

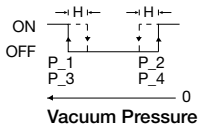

Do not use on CVX Units

Manual setting mode

The LED shows: (P_* at normal open mode and (n_*) at normal close mode. Pressure setting value is shown normally and will not lead to pressure sensor pause or stop working.

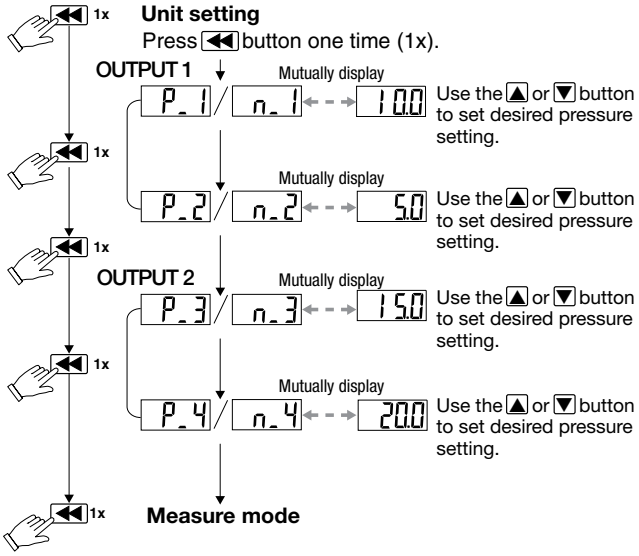

Auto setting mode
(Do not use on CVX Units)

*1. In case of without need of OUT1 pressure value setting, press ▼+▲ at the same time to enter (AP2) / (An2).
*2. In case of without need of OUT2 pressure value setting, press ▼+▲ at the same time to enter measure mode.
3. The LED shows (AP) at normal open mode and (An*) at normal closed mode.

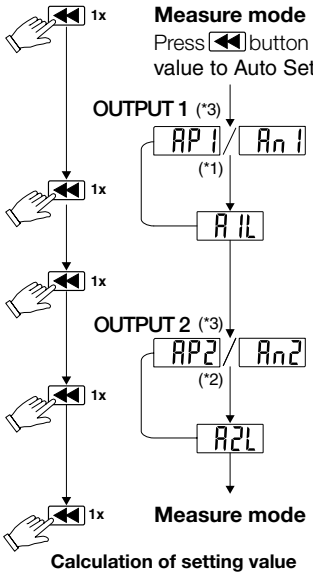

Calculation of setting value
A = The max. pressure value under auto setting mode.
B = The min. pressure value under auto setting mode.

P1 (n1), P3 (n3) $= A - \frac{A-B}{4}$

P2 (n2), P4 (n4) $= B - \frac{A-B}{4}$

Error messages

Error name		Display	Description	Solutions
Excess load current error	OUT1	*Er1*	Excess load current of 80 mA	Turn off power and check the cause of overload current or lower the current load under 80 mA, then restart
	OUT2	*Er2*		
Residual pressure error		*Er3*	During zero reset, ambient pressure is over ±3% F.S.	Change input pressure to ambient pressure and perform zero reset again
Applied pressure error		– – –	The applied pressure is excess the upper limit of pressure setting	Adjust the pressure within applied pressure range
		– – – –	The applied pressure is excess the lower limit of pressure setting	
System Error		*Er4*	Internal data error	Turn power off and then restart. If error condition remains, please return to factory for inspection
		Er6	Internal system error	
		Er7	Internal data error	

Pneumatic Division
Richland, Michigan 49083
269-629-5000

PDNSG-1
Pneumatic Division Safety Guide
ISSUED: August 1 , 2006
Supersedes: June 1, 2006

Safety Guide For Selecting And Using Pneumatic Division Products And Related Accessories

⚠ WARNING:

FAILURE OR IMPROPER SELECTION OR IMPROPER USE OF PNEUMATIC DIVISION PRODUCTS, ASSEMBLIES OR RELATED ITEMS ("PRODUCTS") CAN CAUSE DEATH, PERSONAL INJURY, AND PROPERTY DAMAGE. POSSIBLE CONSEQUENCES OF FAILURE OR IMPROPER SELECTION OR IMPROPER USE OF THESE PRODUCTS INCLUDE BUT ARE NOT LIMITED TO:

- Unintended or mistimed cycling or motion of machine members or failure to cycle
- Work pieces or component parts being thrown off at high speeds.
- Failure of a device to function properly for example, failure to clamp or unclamp an associated item or device.
- Explosion
- Suddenly moving or falling objects.
- Release of toxic or otherwise injurious liquids or gasses.

Before selecting or using any of these Products, it is important that you read and follow the instructions below.

1. GENERAL INSTRUCTIONS

1.1. Scope: This safety guide is designed to cover general guidelines on the installation, use, and maintenance of Pneumatic Division Valves, FRLs (Filters, Pressure Regulators, and Lubricators), Vacuum products and related accessory components.

1.2. Fail-Safe: Valves, FRLs, Vacuum products and their related components can and do fail without warning for many reasons. Design all systems and equipment in a fail-safe mode, so that failure of associated valves, FRLs or Vacuum products will not endanger persons or property.

1.3 Relevant International Standards: For a good guide to the application of a broad spectrum of pneumatic fluid power devices see: ISO 4414:1998, Pneumatic Fluid Power – General Rules Relating to Systems. See www.iso.org for ordering information.

1.4. Distribution: Provide a copy of this safety guide to each person that is responsible for selection, installation, or use of Valves, FRLs or Vacuum products. Do not select, or use Parker valves, FRLs or vacuum products without thoroughly reading and understanding this safety guide as well as the specific Parker publications for the products considered or selected.

1.5. User Responsibility: Due to the wide variety of operating conditions and applications for valves, FRLs, and vacuum products Parker and its distributors do not represent or warrant that any particular valve, FRL or vacuum product is suitable for any specific end use system. This safety guide does not analyze all technical parameters that must be considered in selecting a product. The user, through its own analysis and testing, is solely responsible for:

- Making the final selection of the appropriate valve, FRL, Vacuum component, or accessory.
- Assuring that all user's performance, endurance, maintenance, safety, and warning requirements are met and that the application presents no health or safety hazards.
- Complying with all existing warning labels and / or providing all appropriate health and safety warnings on the equipment on which the valves, FRLs or Vacuum products are used; and,
- Assuring compliance with all applicable government and industry standards.

1.6. Safety Devices: Safety devices should not be removed, or defeated.

1.7. Warning Labels: Warning labels should not be removed, painted over or otherwise obscured.

1.8. Additional Questions: Call the appropriate Parker technical service department if you have any questions or require any additional information. See the Parker publication for the product being considered or used, or call 1-800-CPARKER, or go to www.parker.com, for telephone numbers of the appropriate technical service department.

2. PRODUCT SELECTION INSTRUCTIONS

2.1. Flow Rate: The flow rate requirements of a system are frequently the primary consideration when designing any pneumatic system. System components need to be able to provide adequate flow and pressure for the desired application.

2.2. Pressure Rating: Never exceed the rated pressure of a product. Consult product labeling, Pneumatic Division catalogs or the instruction sheets supplied for maximum pressure ratings.

2.3. Temperature Rating: Never exceed the temperature rating of a product. Excessive heat can shorten the life expectancy of a product and result in complete product failure.

2.4. Environment: Many environmental conditions can affect the integrity and suitability of a product for a given application. Pneumatic Division products are designed for use in general purpose industrial applications. If these products are to be used in unusual circumstances such as direct sunlight and/or corrosive or caustic environments, such use can shorten the useful life and lead to premature failure of a product.

2.5. Lubrication and Compressor Carryover: Some modern synthetic oils can and will attack nitrile seals. If there is any possibility of synthetic oils or greases migrating into the pneumatic components check for compatibility with the seal materials used. Consult the factory or product literature for materials of construction.

2.6. Polycarbonate Bowls and Sight Glasses: To avoid potential polycarbonate bowl failures:

- Do not locate polycarbonate bowls or sight glasses in areas where they could be subject to direct sunlight, impact blow, or temperatures outside of the rated range.
- Do not expose or clean polycarbonate bowls with detergents, chlorinated hydro-carbons, keytones, esters or certain alcohols.
- Do not use polycarbonate bowls or sight glasses in air systems where compressors are lubricated with fire resistant fluids such as phosphate ester and di-ester lubricants.

2.7. Chemical Compatibility: For more information on plastic component chemical compatibility see Pneumatic Division technical bulletins Tec-3, Tec-4, and Tec-5

2.8. Product Rupture: Product rupture can cause death, serious personal injury, and property damage.
- Do not connect pressure regulators or other Pneumatic Division products to bottled gas cylinders.
- Do not exceed the maximum primary pressure rating of any pressure regulator or any system component.
- Consult product labeling or product literature for pressure rating limitations.

3. PRODUCT ASSEMBLY AND INSTALLATION INSTRUCTIONS

3.1. Component Inspection: Prior to assembly or installation a careful examination of the valves, FRLs or vacuum products must be performed. All components must be checked for correct style, size, and catalog number. DO NOT use any component that displays any signs of nonconformance.

3.2. Installation Instructions: Parker published Installation Instructions must be followed for installation of Parker valves, FRLs and vacuum components. These instructions are provided with every Parker valve or FRL sold, or by calling 1-800-CPARKER, or at www.parker.com.

3.3. Air Supply: The air supply or control medium supplied to Valves, FRLs and Vacuum components must be moisture-free if ambient temperature can drop below freezing

4. VALVE AND FRL MAINTENANCE AND REPLACEMENT INSTRUCTIONS

4.1. Maintenance: Even with proper selection and installation, valve, FRL and vacuum products service life may be significantly reduced without a continuing maintenance program. The severity of the application, risk potential from a component failure, and experience with any known failures in the application or in similar applications should determine the frequency of inspections and the servicing or replacement of Pneumatic Division products so that products are replaced before any failure occurs. A maintenance program must be established and followed by the user and, at minimum, must include instructions 4.2 through 4.10.

4.2. Installation and Service Instructions: Before attempting to service or replace any worn or damaged parts consult the appropriate Service Bulletin for the valve or FRL in question for the appropriate practices to service the unit in question. These Service and Installation Instructions are provided with every Parker valve and FRL sold, or are available by calling 1-800-CPARKER, or by accessing the Parker web site at www.parker.com.

4.3. Lockout / Tagout Procedures: Be sure to follow all required lockout and tagout procedures when servicing equipment. For more information see: OSHA Standard – 29 CFR, Part 1910.147, Appendix A, The Control of Hazardous Energy – (Lockout / Tagout)

4.4. Visual Inspection: Any of the following conditions requires immediate system shut down and replacement of worn or damaged components:
- Air leakage: Look and listen to see if there are any signs of visual damage to any of the components in the system. Leakage is an indication of worn or damaged components.
- Damaged or degraded components: Look to see if there are any visible signs of wear or component degradation.
- Kinked, crushed, or damaged hoses. Kinked hoses can result in restricted air flow and lead to unpredictable system behavior.
- Any observed improper system or component function: Immediately shut down the system and correct malfunction.
- Excessive dirt build-up: Dirt and clutter can mask potentially hazardous situations.

Caution: Leak detection solutions should be rinsed off after use.

4.5. Routine Maintenance Issues:
- Remove excessive dirt, grime and clutter from work areas.
- Make sure all required guards and shields are in place.

4.6. Functional Test: Before initiating automatic operation, operate the system manually to make sure all required functions operate properly and safely.

4.7. Service or Replacement Intervals: It is the user's responsibility to establish appropriate service intervals. Valves, FRLs and vacuum products contain components that age, harden, wear, and otherwise deteriorate over time. Environmental conditions can significantly accelerate this process. Valves, FRLs and vacuum components need to be serviced or replaced on routine intervals. Service intervals need to be established based on:
- Previous performance experiences.
- Government and / or industrial standards.
- When failures could result in unacceptable down time, equipment damage or personal injury risk.

4.8. Servicing or Replacing of any Worn or Damaged Parts: To avoid unpredictable system behavior that can cause death, personal injury and property damage:
- Follow all government, state and local safety and servicing practices prior to service including but not limited to all OSHA Lockout Tagout procedures (OSHA Standard – 29 CFR, Part 1910.147, Appendix A, The Control of Hazardous Energy – Lockout / Tagout).
- Disconnect electrical supply (when necessary) before installation, servicing, or conversion.
- Disconnect air supply and depressurize all air lines connected to system and Pneumatic Division products before installation, service, or conversion.
- Installation, servicing, and / or conversion of these products must be performed by knowledgeable personnel who understand how pneumatic products are to be applied.
- After installation, servicing, or conversions air and electrical supplies (when necessary) should be connected and the product tested for proper function and leakage. If audible leakage is present, or if the product does not operate properly, do not put product or system into use.
- Warnings and specifications on the product should not be covered or painted over. If masking is not possible, contact your local representative for replacement labels.

4.9. Putting Serviced System Back into Operation: Follow the guidelines above and all relevant Installation and Maintenance Instructions supplied with the valve FRL or vacuum component to insure proper function of the system.