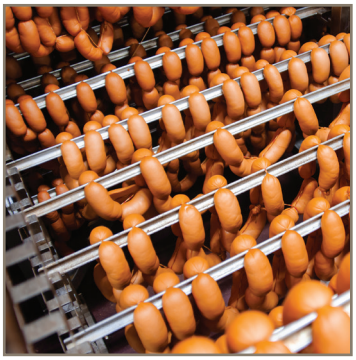

PSG Series

INDUSTRIAL FOOD EMISSION CONTROL SYSTEMS

Parker

ENGINEERING YOUR SUCCESS.

INDUSTRIAL COOKING

Controlling emissions is an important issue for industrial food processing facilities. Finding pollution control solutions that will capture visible cooking emissions and odor in an effective, safe and economical manner is essential. Key considerations include:

- Regulatory compliance
- Controlling emissions
- Enhanced performance of existing equipment

Achieve Regulatory Compliance

As federal and local regulations for air quality become more stringent, food processing facilities are feeling the impact. Whether these regulations come from the EPA, zoning boards, the health department or another authority having jurisdiction, it is increasingly important to control emissions generated during cooking processes. Emissions include particulate matter such as smoke, oil or grease and may also include odor. Identifying effective solutions that will help food processing companies achieve regulatory compliance is critical.

Control Emissions

Since food processing facilities are located in both urban and rural areas, uncontrolled cooking emissions can fill the outside air we breathe with pollutants and coat facility roofs, cars in nearby parking lots and even neighboring buildings or homes with particulate matter. Associated odors may migrate throughout nearby neighborhoods causing issues with tenants or homeowners. In some cases, municipalities are asking food processors who have been in business at a location for many years to now address and control their emissions in order to support other development projects going on around them.

Enhance Existing Operations

Cooking emissions are sometimes controlled through the use of incinerators which are costly systems to purchase, to operate (due to natural gas usage) and to maintain. By reducing the emissions with an air pollution control device, incinerators can be reduced in size or even eliminated which can save operating costs and extend maintenance intervals all while reducing emissions. There are inherent risks of fire when collecting some cooking emissions so proper collection is essential to keep both workers and facilities safe.

CLEAN AIR SOLUTIONS

As a leading solutions provider within the air pollution control industry, Parker has the products, expertise and experience with industrial applications to meet your specific air pollution control needs. Parker has provided SmogHog® system solutions for a wide variety of industrial food processing applications for high-profile industrial kitchen applications.

Proven Technology, Optimum Performance

Parker SmogHog® electrostatic precipitator (ESP) technology is ideally suited for controlling emission for industrial cooking applications. The ESP process charges particles and strips them from the airstream, capturing even sub-micronic contaminants, and leaves only clean air to be exhausted from the unit. This technology offers high levels of efficiency with low pressure drop for a proven combination of performance with low energy consumption. The ESP collection cells can be cleaned so there is no need for recurring filter replacement purchases.

Flexible System Configuration for Smoke, Grease and Odor Control

Applications vary greatly based on the process or method of cooking involved. Parker offers configurable systems that can accommodate a wide range of airflows along with customizable options to tackle your most challenging processes. For heavy particulate loading such as wood-fired cooking or smoking applications, multiple passes can be used to achieve higher levels of removal efficiency. For grease or "sticky" particulate, in-place cell washing systems are available which also extend maintenance intervals. To control odor, Parker offers carbon or potassium permanganate filters. Parker systems are ETL listed and for an additional safety measure, the units can be equipped to work with Ansul fire suppression systems.

More Architectural Freedom

Our wide selection of configurations and sizes, ranging from 825–22,000 CFM, is ideal for virtually any building design parameter and performance requirement. So regardless of hood size, our emission control systems provide for the ultimate flexibility in location. Feel free to mount our systems through exterior walls, on top of buildings, inside mechanical rooms or above the ceiling.

Odor Control Module

"V-bank" odor control design allows for high filtration efficiency of gaseous odors utilizing various media options.

Collection Cells

Reusable two-stage ESP collection cells for efficient cleaning with low static pressure.

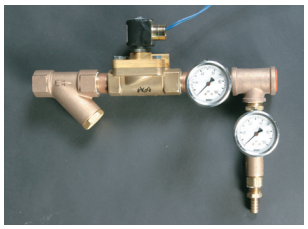

Injector-TEE Assembly

Systematically controls detergent use and allows for optimal cleaning while eliminating facility maintenance required to dilute detergent.

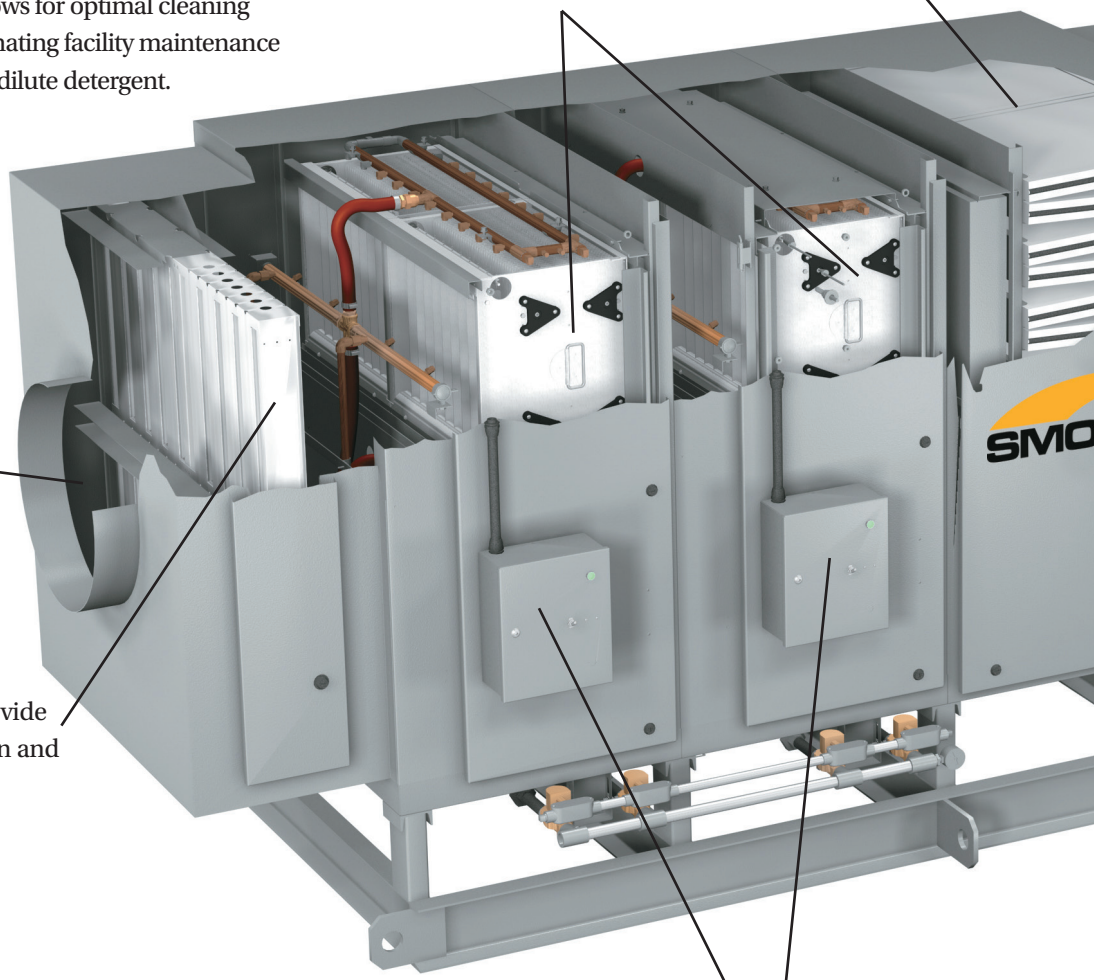

Inlet Plenum

Effectively transitions airstream to collection cells.

Impingement Baffle Prefilter

Adjustable interlocking "U" channels provide tortuous path for even airflow distribution and protection from large contaminants.

Control Panel

Single or separate panels can operate all equipment functions. Panels can be remote-mounted as required, and entire system can be tied to a building maintenance system.

Transformer Power Packs

UL listed electronic circuitry with self-regulating components provides maximum collection of grease and odor emissions.

SMOGHOG®

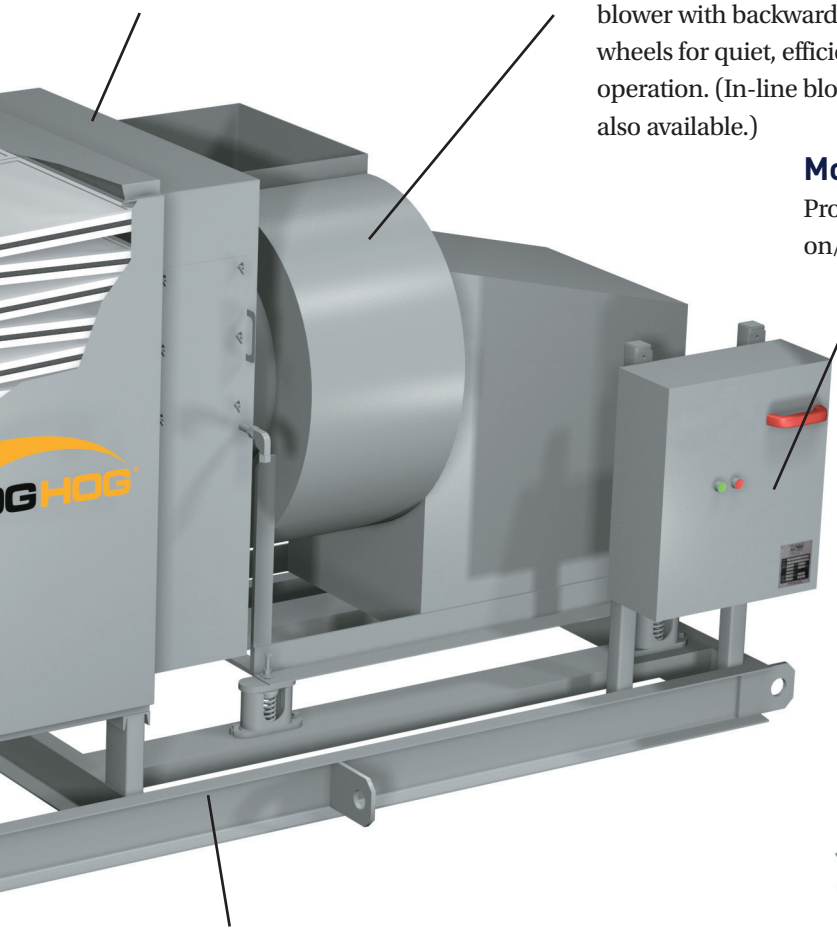

Outlet Plenum
Effectively transitions airstream to blower system.

System Blower
UL 762 listed, energy efficient blower with backward inclined wheels for quiet, efficient operation. (In-line blowers also available.)

Motor Starter
Provides system on/off control.

Detergent Tank
Self-contained tank holds concentrated detergents used to clean kitchen emissions from commercial and industrial applications. (Includes integral mounted pump.)

Structural Steel Skid
Heavy-duty structural channel base integrates system and facilitates easier installation.

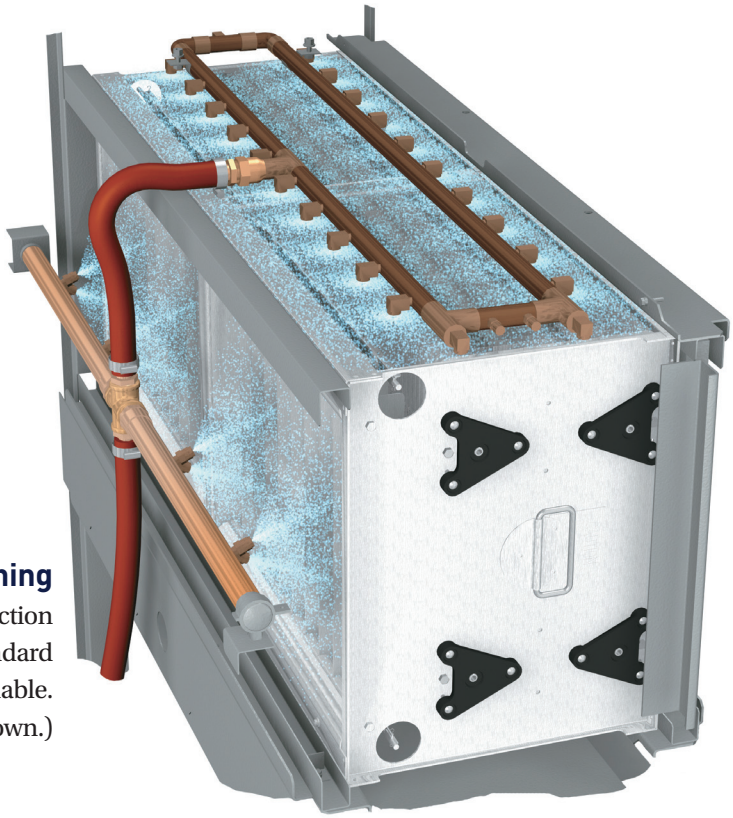

In-Place Cleaning
Fixed wash headers clean collection components without removal. Standard and heavy load options available. (Heavy load option shown.)

Proven Technology, Optimum Performance

The SmogHog ESP Advantage

Electrostatic precipitation technology (ESP) is the key to the superior performance of the PSG. SmogHog ESP systems are over 95% efficient on mist, smoke and fume removal to keep factory air clean and your processes running at peak performance. Unlike bag or box filters that remove only the largest particles, ESP electrically charges both large and microscopic contaminants, and then strips them from the air stream collecting on grounded collection plates.

The resulting discharged air leaves virtually no oil mist, grease or hazardous particle untouched, releasing only clean air from the system to help you comply with even the strictest federal, state and local environmental standards and keep your workers safe. The SmogHog® ESP technology ensures constant airflow, unlike barrier filters that can plug and become ineffective. Since the ESP cells are washable, reusing the collection cells eliminates costly filter replacements and disposal which allows for a greener environment and increased operational savings.

Electrostatic (ESP) Filter Module

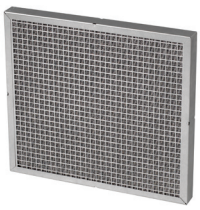

Mist-Stop Filter

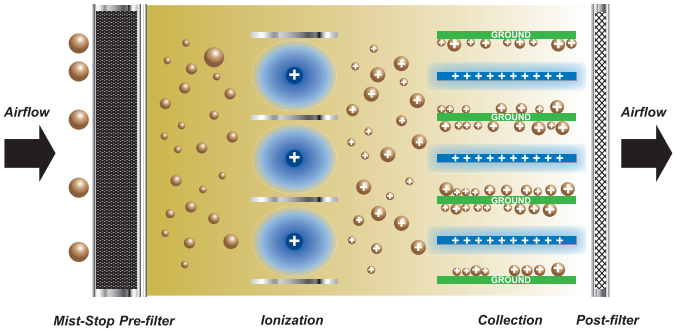

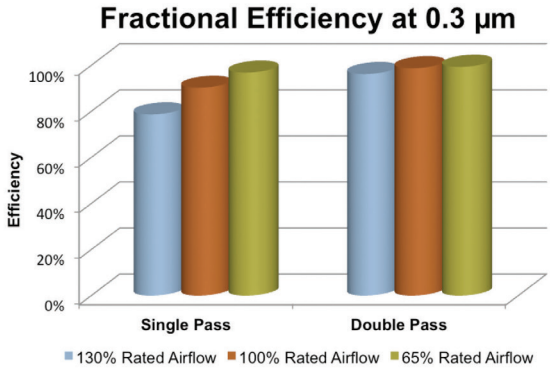

*95% efficiency has been independently verified in accordance with EN-1822-5 standards.

Superior ESP Efficiency

SmogHog® ESP technology offers proven performance as a superior solution for challenging industrial air pollution control applications. SmogHog® ESP technology provides high levels of particle removal efficiency on submicronic particulate (less than 1 micron) which is common in smoke, fume and mist applications. A single pass SmogHog ESP unit removes up to 95%* of 0.3 micron particles while a double pass SmogHog ESP configuration increases the overall removal efficiency to over 97%.

Unsurpassed Collection Technology

It's not just the SmogHog® ESP technology that provides superior cleaning. Unlike competitive ESP cells, the SmogHog® collection cell plates are aligned more closely to improve collection efficiency. For routine maintenance, the PSG's 40 lb. collection cells are much easier to handle than competitive cells that weigh 80 lbs. or more!

Reliable Power

Only SmogHog® includes a self-regulating power pack. This provides continually high collection-efficiency over a variable range of cooking conditions. In the unlikely event of a power pack failure, SmogHog® also provides multiple power packs so that the entire system need not be shut down.

Accessories/Options

- Custom control panels
- Custom paint colors
- Factory start-up/orientation
- Fire suppression system
- Inlet plenum with grease impingement prefilter
- In-place cleaning systems
- Insulated weather enclosure
- Motor starter
- Odor control modules
- Outlet transition plenum
- Prefilter options
- Remote start/stop control panel
- ETL agency-approved

SmogHog Installations

Over the years we have installed our SmogHog® PSG Equipment into several high-profile commercial applications; places like:

- Amazon
- Freedom Tower
- Google
- Rockefeller Center
- Walt Disney World
- Whole Foods
- Yankee Stadium

Several years ago, we started to get inquiries from Industrial customers:

- Fish Fryers
- Fish Smokers
- Snack Food Manufacturers
- Bacon Processors
- Smokehouse Equipment Manufacturers
- Frying Equipment Manufacturers
- Smoked Sausage Manufacturers
- Packaged Food Manufacturers
- Pet Food Manufacturers

All the above industries have called on Parker to help control their Industrial Food emissions. If you would like to see if our product is the right fit for you, please feel free to call on Parker.

Some of our current Industrial Food Customers are:

- Bavarian Meats
- Evans Foods
- Maruchan Foods
- Oberto Beef Jerky
- Purina Alpo
- Trident Seafood
- Friedrich Metal Products
- Vortron Smokehouses
- Maurer Smokehouses
- MPBS Industries
- Enviro-Pak

Agency Listings/Approvals

UL Standards 867 and 710
City of Los Angeles
City of New York – COA and BEC approved

Parker Hannifin is committed to providing clean air solutions that protect your employees, improve plant performance and enable you to realize your operating goals.

Our commitment is backed by continuous investment in research, leading-edge technology and product development, our people whom are the most knowledgeable in the industry, and a product portfolio that is proven to deliver results. We have been solving problems for you, our customers across the globe for over 50 years.

© 2020 Parker Hannifin Corporation

BRO_PKR_PSG Industrial Food Brochure_082020

Industrial Gas Filtration and Generation Division
4087 Walden Avenue
Lancaster NY 14086 USA
Ph: 800-252-4647
Ph: 513-891-0400
smoghog@parker.com

ENGINEERING YOUR SUCCESS.